INOVANCE

FORWARD, ALWAYS PROGRESSING



SV660N Series Servo Drive

Safety Guide

Industrial Automation | Intelligent Elevator | New Energy Vehicle | Industrial Robot | Rail Transit

Data code 19011883 A00

Preface

Introduction

The SV660N series is a high-performance AC servo drive developed by Inovance for small and medium power applications. Covering a power range from 0.05 kW to 7.5 kW, it supports the EtherCAT communication protocol and carries Ethernet communication interfaces to work with the host controller for a networked operation of multiple servo drives.

The SV660N series servo drive supports stiffness level setting, inertia auto-tuning and vibration suppression to simplify the operation process. It allows a quiet and stable operation together with an MS1 series high-response servo motor with low or medium inertia and a 23-bit single-turn or multi-turn absolute encoder.

The SV660N series servo drive aims to implement fast and accurate control in automation equipment such as semi-conductor manufacturing equipment, chip mounters, PCB punching machines, handling machinery, food processing machinery, machine tools, and conveyor machinery.

This guide presents the safety function and related certifications and standards, wiring, commissioning process, troubleshooting, and functions.

More Documents

Document Name	Data Code	Description
SV660N Series Servo Drive Selection Guide	19011354	Presents technical data and dimensions of the servo drive, and specifications and models of optional parts (installation accessories, cables, and peripheral electrical parts).
SV660N Series Servo Drive Hardware Guide	19011360	Presents installation and wiring of the servo drive, including preparations before installation, unpacking inspection and transportation, mechanical installation, and electrical installation.
SV660N Series Servo Drive Commissioning Guide	19011362	Presents servo commissioning, parameter descriptions, and troubleshooting, including the operating panel, commissioning software, commissioning process and procedure, troubleshooting, and parameter list.
SV660N Series Servo Drive Function Guide	19011361	Presents functions and parameters, including function overview, basic servo functions, adjustment, and parameter list.

Document Name	Data Code	Description
SV660N Series Servo Drive Communication Guide	19011395	Presents functions and parameters of the servo drive, including EtherCAT communication configuration, fault description, parameter description, and communication application cases.
SV660N Series Servo Drive Troubleshooting Guide	19011847	Presents faults and fault levels, the troubleshooting process, warning codes, and fault codes.
SV660N Series Servo Drive Manual Package	PS00005512	Provides information on selection, installation, commissioning, function, troubleshooting, and parameters of the servo drive.

Revision History

Date of Revision	Version	Description
May 2022	A00	First release

Document Acquisition

This manual is not delivered with the product. You can obtain the PDF version by visiting:

- *www.inovance.com*
- Scan the QR code on the equipment to acquire more.

Table of Contents

Preface 1
Fundamental Safety Instructions 5
1 General 12
1.1 Terms and Abbreviations 12
1.2 Safety Standards 12
1.3 Precautions for Use 16
2 Product Information 20
2.1 Model Number and Nameplate 20
2.2 Components of Servo Drives and Servo Motors 22
2.2.1 Servo Drives in Size A (Rated Power: 0.2 kW to 0.4 kW) 22
2.2.2 Servo Drives in Size B (Rated Power: 0.75 kW) 24
2.2.3 Servo Drives in Size C and Size D (Rated Power: 1.0 kW to 3.0 kW) 26
2.2.4 Servo Drives in Size E (Rated Power: 5.0 kW to 7.5 kW) 30
2.3 Electrical Specifications 31
2.4 Basic Specifications 34
2.5 Technical Data of EtherCAT Communication 36
2.6 Dimensions 37
3 Installation 38
3.1 Unpacking and Transportation 38
3.2 Installation Environment 40
3.3 Installation Clearance 41
3.4 Installation Dimensions 43
3.5 Installation Precautions 45
3.6 Installation Guide 47
4 Wiring 48
4.1 Rules 48
4.2 Main Circuit Wiring Requirements 50
4.3 CN6 (STO Safety Terminal) 51
5 Keypad 55
5.1 Panel Components 55
5.2 Panel Display 56
5.3 Parameter Settings 61
6 STO 74
6.1 Overview 74

6.2 Function Use and Monitoring 74
6.3 Fault Reset 76
6.4 Safety Function Response Time 77
7 Commissioning and Operation 79
7.1 Commissioning Flowchart 79
7.2 Commissioning Steps 80
7.3 Acceptance 80
8 Maintenance 83
8.1 Routine Maintenance 83
8.1.1 Routine Checklist 83
8.1.2 Routine Cleaning List 83
8.2 Periodic maintenance 84
8.2.1 Periodic Checklist 84
8.2.2 Periodic Maintenance List 84
9 Certification and Standard Compliance 86
9.1 CE Certification 86
9.1.1 Requirement for Compliance with EMC Directive 87
9.1.2 Requirements for Compliance with LVD 88
9.2 UL and cUL Certification 89
10 Troubleshooting 93
11 List of Parameters 94

Fundamental Safety Instructions

Safety Precautions

- This chapter presents essential safety instructions for a proper use of the equipment. Before operating the equipment, read through the guide and comprehend all the safety instructions. Failure to comply with the safety instructions may result in death, severe personal injuries, or equipment damage.
- "CAUTION", "WARNING", and "DANGER" items in the guide only indicate some of the precautions that need to be followed; they just supplement the safety precautions.
- Use this equipment according to the designated environment requirements. Damage caused by improper use is not covered by warranty.
- Inovance shall take no responsibility for any personal injuries or property damage caused by improper use.

Safety Levels and Definitions

	Indicates that failure to comply with the notice will result in death or severe personal injuries.
	Indicates that failure to comply with the notice may result in death or severe personal injuries.
	Indicates that failure to comply with the notice may result in minor or moderate personal injuries or equipment damage.

General Safety Instructions

- Drawings in the guide are sometimes shown without covers or protective guards. Remember to install the covers or protective guards as specified first, and then perform operations in accordance with the instructions.
- The drawings in the guide are shown for illustration only and may be different from the product you purchased.

Unpacking

• Do not install the equipment if you find damage, rust, or signs of use on the equipment or accessories upon unpacking. • Do not install the equipment if you find water seepage or missing or damaged components upon unpacking. • Do not install the equipment if you find the packing list does not conform to the equipment you received.



- Check whether the packing is intact and whether there is damage, water seepage, dampness, and deformation before unpacking.
- Unpack the package by following the unpacking sequence. Do not strike the package violently.
- Check whether there is damage, rust, or injuries on the surface of the equipment and equipment accessories before unpacking.
- Check whether the package contents are consistent with the packing list before unpacking.

Storage and Transportation



- Large-scale or heavy equipment must be transported by qualified professionals using specialized hoisting equipment. Failure to comply may result in personal injuries or equipment damage.
- Before hoisting the equipment, ensure the equipment components such as the front cover and terminal blocks are secured firmly with screws. Loosely-connected components may fall off and result in personal injuries or equipment damage.
- Never stand or stay below the equipment when the equipment is being hoisted by the hoisting equipment.
- When hoisting the equipment with a steel rope, ensure the equipment is hoisted at a constant speed without suffering from vibration or shock. Do not turn the equipment over or let the equipment stay hanging in the air. Failure to comply may result in personal injuries or equipment damage.



- Handle the equipment with care during transportation and mind your steps to prevent personal injuries or equipment damage.
- When carrying the equipment with bare hands, hold the equipment casing firmly with care to prevent parts from falling. Failure to comply may result in personal injuries.
- Store and transport the equipment based on the storage and transportation requirements. Failure to comply will result in equipment damage.
- Avoid storing or transporting the equipment in environments with water splash, rain, direct sunlight, strong electric field, strong magnetic field, and strong vibration.
- Avoid storing the equipment for more than three months. Long-term storage requires stricter protection and necessary inspections.
- Pack the equipment strictly before transportation. Use a sealed box for long-distance transportation.
- Never transport the equipment with other equipment or materials that may harm or have negative impacts on this equipment.

Installation



- The equipment must be operated only by professionals with electrical knowledge.



- Read through the guide and safety instructions before installation.
- Do not install this equipment in places with strong electric or magnetic fields.
- Before installation, check that the mechanical strength of the installation site can bear the weight of the equipment. Failure to comply will result in mechanical hazards.
- Do not wear loose clothes or accessories during installation. Failure to comply may result in an electric shock.
- When installing the equipment in a closed environment (such as a cabinet or casing), use a cooling device (such as a fan or air conditioner) to cool the environment down to the required temperature. Failure to comply may result in equipment over-temperature or a fire.
- Do not retrofit the equipment.
- Do not fiddle with the bolts used to fix equipment components or the bolts marked in red.
- When the equipment is installed in a cabinet or final assembly, a fireproof enclosure providing both electrical and mechanical protections must be provided. The IP rating must meet IEC standards and local laws and regulations.
- Before installing devices with strong electromagnetic interference, such as a transformer, install a shielding device for the equipment to prevent malfunction.
- Install the equipment onto an incombustible object such as a metal. Keep the equipment away from combustible objects. Failure to comply will result in a fire.



- Cover the top of the equipment with a piece of cloth or paper during installation. This is to prevent unwanted objects such as metal chippings, oil, and water from falling into the equipment and causing faults. After installation, remove the cloth or paper on the top of the equipment to prevent over-temperature caused by poor ventilation due to blocked ventilation holes.
- Resonance may occur when the equipment operating at a constant speed executes variable speed operations. In this case, install the vibration-proof rubber under the motor frame or use the vibration suppression function to reduce resonance.

Wiring



- Equipment installation, wiring, maintenance, inspection, or parts replacement must be performed only by professionals.
- Before wiring, cut off all the power supplies of the equipment, and wait for at least the time designated on the equipment warning label before further operations because residual voltage still exists after power-off. After waiting for the designated time, measure the DC voltage in the main circuit to ensure the DC voltage is within the safe voltage range. Failure to comply will result in an electric shock.
- Do not perform wiring, remove the equipment cover, or touch the circuit board with power ON. Failure to comply will result in an electric shock.
- Check that the equipment is grounded properly. Failure to comply will result in an electric shock.



- Do not connect the input power supply to the output end of the equipment. Failure to comply will result in equipment damage or even a fire.
- When connecting a drive to the motor, check that the phase sequences of the drive and motor terminals are consistent to prevent reverse motor rotation.
- Cables used for wiring must meet cross sectional area and shielding requirements. The shield of the cable must be reliably grounded at one end.
- Fix the terminal screws with the tightening torque specified in the user guide. Improper tightening torque may overheat or damage the connecting part, resulting in a fire.
- After wiring is done, check that all cables are connected properly and no screws, washers or exposed cables are left inside the equipment. Failure to comply may result in an electric shock or equipment damage.



- During wiring, follow the proper electrostatic discharge (ESD) procedure, and wear an antistatic wrist strap. Failure to comply will damage the equipment or the internal circuits of the equipment.
- Use shielded twisted pairs for the control circuit. Connect the shield to the grounding terminal of the equipment for grounding purpose. Failure to comply will result in equipment malfunction.

Power-on



- Before power-on, check that the equipment is installed properly with reliable wiring and the motor can be restarted.
- Check that the power supply meets equipment requirements before power-on to prevent equipment damage or a fire.
- After power-on, do not open the cabinet door or protective cover of the equipment, touch any terminal, or disassemble any unit or component of the equipment. Failure to comply will result in an electric shock.



- Perform a trial run after wiring and parameter setting to ensure the equipment operates safely. Failure to comply may result in personal injuries or equipment damage.
- Before power-on, check that the rated voltage of the equipment is consistent with that of the power supply. Failure to comply may result in a fire.
- Before power-on, check that no one is near the equipment, motor, or machine. Failure to comply may result in death or personal injuries.

Operation



- The equipment must be operated only by professionals. Failure to comply will result in death or personal injuries.
- Do not touch any connecting terminals or disassemble any unit or component of the equipment during operation. Failure to comply will result in an electric shock.



- Do not touch the equipment casing, fan, or resistor with bare hands to feel the temperature. Failure to comply may result in personal injuries.
- Prevent metal or other objects from falling into the equipment during operation. Failure to comply may result in a fire or equipment damage.

Maintenance



- Equipment installation, wiring, maintenance, inspection, or parts replacement must be performed only by professionals.
- Do not maintain the equipment with power ON. Failure to comply will result in an electric shock.
- Before maintenance, cut off all the power supplies of the equipment and wait for at least the time designated on the equipment warning label.
- In case of a permanent magnet motor, do not touch the motor terminals immediately after power-off because the motor terminals will generate induced voltage during rotation even after the equipment power supply is off. Failure to comply will result in an electric shock.



- Perform routine and periodic inspection and maintenance on the equipment according to maintenance requirements and keep a maintenance record.

Repair



- Equipment installation, wiring, maintenance, inspection, or parts replacement must be performed only by professionals.
- Do not repair the equipment with power ON. Failure to comply will result in an electric shock.
- Before inspection and repair, cut off all the power supplies of the equipment and wait for at least the time designated on the equipment warning label.



- When the fuse is blown or the circuit breaker or earth leakage current breaker (ELCB) trips, wait for at least the time designated on the equipment warning label before power-on or further operations. Failure to comply may result in death, personal injuries or equipment damage.
- When the equipment is faulty or damaged, the troubleshooting and repair work must be performed by professionals that follow the repair instructions, with repair records kept properly.
- Replace quick-wear parts of the equipment according to the replacement instructions.
- Do not use damaged equipment. Failure to comply may result in death, personal injuries, or severe equipment damage.
- After the equipment is replaced, check the wiring and set parameters again.

Disposal



- Dispose of retired equipment in accordance with local regulations and standards. Failure to comply may result in property damage, personal injuries, or even death.
- Recycle retired equipment by observing industry waste disposal standards to avoid environmental pollution.

Other Precautions

Dynamic brake

- The dynamic brake can only be used for emergency stop upon fault or power failure. Do not trigger faults or power failure frequently.
- The action interval of the dynamic brake function must be above 5 min during high-speed operation. Failure to comply may damage the internal dynamic braking circuit.
- A motor being driven by the load axis is in the generating state, which is common in rotary mechanical structures during dynamic braking stop. Under such state, a short circuit current will pass through the dynamic brake. If the motor keeps being driven by the load axis, smoke or flame may be generated from the drive, resulting in motor damage.

Safety Labels

For safe equipment operation and maintenance, comply with the safety labels on the equipment. Do not damage or remove the safety labels. See the following table for descriptions of the safety labels.

Safety Label	Description
	• Never fail to connect protective earth (PE) terminal. Read through the guide and follow the safety instructions before use. • Do not touch terminals within 15 minutes after disconnecting the power supply to prevent the risk of electric shock. • Do not touch heatsink with power ON to prevent the risk of burn.

1 General

1.1 Terms and Abbreviations

Terms and Abbreviations	Description
Cat.	Safety category It includes B, 1, 2, 3, and 4.
CCF	Common cause failure
DCavg	Average diagnostic coverage (%)
DTI	Diagnostic test interval time
SFF	Safe failure fraction
HFT	Hardware fault tolerance
PFH_D	Probability of a dangerous Failure per Hour
PL	Performance Level
SC	Systematic capability
SIL	Safety integrity level
T_1	Test interval
DI	Digital input
DO	Digital output
PCB	Printed circuit board
MCU	Micro computer unit
FPGA	Field programmable gate array
MTTFd	Mean time to dangerous failure
STO	The safe torque off (STO) function brings the machine safely into a no-torque state and prevents it from unexpected start. If the motor is running when STO function is activated, it coasts to 0 RPM.
Safe state	Disabling the PWM gating signal of the drive
System reset	Resetting the servo system through resetting the power supply or executing software reset
Proof test	Tests used to detect the failure of safety-related systems
Mission time	Specified cumulative operating time of the safety-related parts of the servo drive during its overall lifetime

1.2 Safety Standards

Standards compliance

- North American standards (UL)
  UL 61800-5-1

  CSA C22.2 No. 274

- EC directives and standards
  Low Voltage Directive 2014/35/EU Standard EN 61800-5-1

  Electromagnetic Compatibility Directive 2014/30/EU Standard EN 61800-3:2018

  Machinery Directive 2006/42/EC (functional safety) Standard IEC 61800-5-2

- Safety standard

Safety Standard	Reference
Functional safety	IEC 61508: 2010 ISO 13849-1: 2015 ISO 13849-2: 2012 IEC 62061: 2021 IEC 61800-3: 2017 EN 61508: 2010 EN ISO 13849-1: 2015 EN ISO 13849-2: 2012 EN IEC 62061: 2021 EN IEC 61800-3: 2018 IEC60204-1:2016 (in extracts) EN60204-1:2018 (in extracts)
EMC	IEC 61000-6-7:2014 IEC 61326-3-1:2017 IEC 61800-5-2: 2016 IEC 61800-3:2017 EN 61000-6-7:2015 EN 61326-3-1:2017 EN 61800-5-2: 2017 EN IEC 61800-3:2018
LVD	IEC 61800-5-1:2007/AMD1:2016 EN 61800-5-1:2007/A1:2017

- Safety data

Item	Safety Data
Safety integrity level (SIL)	SIL3, IEC61508 Maximum SIL3, EN IEC62061
Probability of Failure per Hour $(PFH)_D$	$PFH_D \leqslant 0.16 \times 10^{-7}$[1/h] (16% of SIL3)
Category	Category 3, EN ISO 13849-1
Performance Level (PL)	PLe, EN ISO 13849-1
Mean Time to Failure (MTTFd) of each channel	441.3 years (high)
Diagnostic coverage (DCavg)	⩾ 90% (medium)
T_1	10 years
Hardware Fault Tolerance (HFT)	1
Stop category (SC)	SC3

Item	Safety Data
Application mode	High demand or continuous mode
λ_S	$1.49x10^{-7}$ / h
λ_{DD}	$1.32x10^{-8}$ / h
λ_{DU}	$4.93x10^{-10}$ / h
MTTR	0 hour
MRT	0 hour

- λ_S means the failure rate of safe failure which brings the system into safe state.
- λ_{DD} means the failure rate of dangerous failure but can be diagnosed by the diagnosis subsystem.
- λ_{DU} means the failure rate of dangerous failure and can't be diagnosed by the diagnosis subsystem.

- Failure mode of each component is from ISO13849-2:2012.
- Failure mode distribution of each component is divided equally.
- Failure rate of each component calculated is from SN29500.

Specifications

- Electrical safety according to IEC 61800-5-1:2016, overvoltage category II
- Environment test requirement according to IEC 61800-5-1:2016
- Operating conditions are shown as follows.

Item	Description
Ambient/Storage temperature	0°C to +55°C/–20°C to +70°C
Ambient/Storage humidity	20% to 95% RH (non-condensing)
Vibration	<table><tr><th>Item</th><th>Test Condition</th></tr><tr><td>Test reference</td><td>See IEC 60068-2-6 4.6</td></tr><tr><td>Condition</td><td>EUT powered on, operating normally</td></tr><tr><td>Motion mode</td><td>Sinusoidal</td></tr><tr><td>Vibration amplitude/ Acceleration</td><td>-</td></tr><tr><td>10 Hz ⩽ f ⩽ 57 Hz</td><td>0.075 mm amplitude</td></tr><tr><td>57 Hz < f ⩽ 150 Hz</td><td>1 g</td></tr><tr><td>Duration of vibration</td><td>10 sweep cycles per axis on each of the three mutually perpendicular axes</td></tr><tr><td>Axes</td><td>X, Y, Z</td></tr><tr><td>Detail of mounting</td><td>According to manufacturer's specification</td></tr></table>

<table>
<tr><th>Item</th><th>Description</th></tr>
<tr><td>Impact resistance</td><td>
<table>
<tr><th>Item</th><th>Test Condition</th></tr>
<tr><td>Test reference</td><td>See IEC 60068-2-27: 2008 Table 17</td></tr>
<tr><td>Condition</td><td>EUT powered on, operating normally</td></tr>
<tr><td>Motion mode</td><td>Half-sine pulse</td></tr>
<tr><td>Impact amplitude/ Duration</td><td>50 m/s^2 (5 g) 30 ms</td></tr>
<tr><td>Times of impact</td><td>3 per axis on each of the three mutually perpendicular axes</td></tr>
<tr><td>Axes</td><td>±X, ±Y, ±Z</td></tr>
<tr><td>Detail of mounting</td><td>According to manufacturer's specification</td></tr>
</table>
</td></tr>
<tr><td>IP rating</td><td>IP20</td></tr>
<tr><td>Pollution degree (PD)</td><td>PD2: free of corrosive or explosive gases; free of exposure to water, oil or chemicals; free of dust, salts or iron dust</td></tr>
<tr><td>Altitude</td><td>2000 m or below</td></tr>
<tr><td>Cooling method</td><td>Clean air (natural convection)</td></tr>
<tr><td>Others</td><td>Free of static electricity, strong electromagnetic fields, magnetic fields, or exposure to radioactivity</td></tr>
</table>

- The drive complies with EMC standards EN/IEC 61800-3:2017, IEC 61326-3-1, and IEC 61800-5-2.
- Others

Item	Description
Applicable servo drives SV660, SV630, SV635	SV6***S1R6I-FS SV6***S2R8I-FS SV6***S5R5I-FS SV6***S7R6I-FS SV6***S012I-FS SV6***T3R5I-FS SV6***T5R4I-FS SV6***T8R4I-FS SV6***T012I-FS SV6***T017I-FS SV6***T021I-FS SV6***T026I-FS
Position	Integrated on the control board of the drive
Safety function - Inputs	Two channels: STO1/STO2

The STO subsystem elements must always be able to operate within the range of temperature, humidity, corrosion, dust, and vibration and other requirements specified above.

1.3 Precautions for Use

General Safety Instructions

The chapter contains the warning symbols used in this manual and the safety instructions which you must obey when you install or connect an option module to a drive or inverter. If you ignore the safety instructions, injury, death or damage can occur. Read this chapter before you start the installation.

Any illustrations, photographs, or examples used in this manual are provided as examples only and may not apply to all products to which this manual is applicable.

The products and specifications described in this manual or the content and presentation of the manual may be changed without notice to improve the product and/or the manual.

Table 1–1 Warnings, Cautions and Notes

Pictogram	Signal word	Meaning	Consequences in case of disregard
Example:  DANGER  Hazardous voltage e.g. electric shock	DANGER	DANGER	Indicates that failure to comply with the notice will result in death or severe personal injuries
	WARNINGS	Warning	Indicates that failure to comply with the notice may result in death or severe personal injuries
	CAUTION	Note	Indicates that failure to comply with the notice may result in minor or moderate personal injuries or equipment damage
	STOP	Prohibit	Indicates that failure to comply with the notice will result in equipment or environmental damage



- High attention is required for electrical installation and at the system design to avoid hazards either in normal operation or in the event of equipment malfunction.
- System design, installation, commissioning and maintenance must be carried out by personnel who have the necessary training and experience. They must read the operating instruction and this safety information.

It is the responsibility of the machine builder/OEM/system integrator to make sure that the essential health and safety function requirements specified in the Machinery Directive are met. Risk analysis and risk assessment is needed before using a product. Make sure that adequate measures are taken to eliminate/reduce the relating risks and components chosen must meet the safety requirements.

This section describes the information that needs to be noted before starting operation. Read the following safety precautions, risk assessment information, and limitations before starting operation.

Safety function: Use the safety function after properly understanding all of these information. Incorrect use of safety functions or use of safety functions that are not sufficient to meet the safety requirements of the site may result in personal injury.

Safety Precautions

Carefully read the following important precautions and observe them when using the safety function.

- STO function is not intended as a replacement for the emergency stop function (E-stop). If only the STO function is triggered, with no extra measures taken, the power supply cannot be cut off in emergencies and high-current parts of the motor and drive are still energized, incurring the risk of electric shock or other risks result in electric energy. Therefore maintenance work on electrical parts of the drive or motor can only be carried out after isolating the drive system from the main supply.
- Depending on the standards and requirements for a particular application, it may be possible to use STO as an integral part of an E-stop system. However, its main purpose is for use in a dedicated safety control arrangement whose purpose is to prevent any hazard from occurring, without the use of an E-stop.
- An E-stop is often provided in a machine to allow for unexpected situations where an operator sees a hazard and can take action to prevent an accident.
- The design requirement for an E-stop differs from that of a safety interlock. Generally, the E-stop is required to be independent from any complex or "intelligent" control. It may use purely electromechanical devices to either disconnect the power or initiate a controlled rapid stop using other means such as dynamic or regenerative braking.

Note

- The design of safety-related systems requires specialist knowledge. To ensure that a complete control system is safe, it is necessary for the whole system to be designed according to recognized safety principles. The use of individual sub-systems such as drives with STO function, which are intended for safety-related applications, does not in itself ensure that the complete system is safe.
- The STO function can be used to stop the drive in emergency stop situations.
- In processes without personnel protection, it is recommended not to stop the drive by using the STO function. If a drive running is stopped by using STO, the drive performs a coast-to-stop. If this is not acceptable, the system should be stopped using the correct mode instead of the STO function.
- This publication is a guide to the application of Inovance SV660 series safety functions, and also on the design of safety-related systems for machinery control.
- It is the responsibility of the designer of the end product or application to ensure that it is safe and in compliance with the relevant regulations.

Risk Assessment

- When using the safety functions, perform risk assessment on the servo system in advance. Make sure that the safety integrity level of the standards is met.
- The following residual risks can be present even when the safety functions operate. Therefore, safety must always be given consideration during risk assessment.
- If external forces (such as gravitational force with a vertical axis) are applied when the safety functions are operating, the motor will rotate due to the action of these external forces. Therefore, you must use a separate mechanical brake to secure the motor.

Note

- In the case of failure of multiple IGBTs, regardless of whether the STO function is enabled, the servo drive can generate an alignment torque. This torque can cause the motor shaft to rotate within a range of up to 180÷p (for a synchronous reluctance motor, the range is 180÷2p).
- p: Number of motor pole pairs.

To ensure safety, users should decide all the risk assessments and residual risks in the entire machine equipment. A company and individual who constructed the safety related system must take full responsibility for installation and commissioning of the system. Additionally, when complying with a European machinery directive, the system must acquire safety standards certification as a whole.

Perform all risk assessments and safe level certification to the machine or the system as a whole. It is recommended that a Certification Body final safety certification of the system be used.

The following shows residual risks concerning the safety function of this product.

Common residual risks

- At the shipment to end-users, check the settings of safety related components with programming tools and monitored/displayed contents on display and record and save the setting data concerning the safety observation function and the programming tools you used. Perform them using a check sheet, etc.
- The safety will not be ensured such as in assembling machine until installing, wiring, and adjustment are completed properly. Install, wire, and adjust your system referring to installation guide for each unit.
- Only qualified personnel are authorized to install, start-up, repair or adjust the machines in which these components are installed. Only trained engineers should install and operate the equipment.
- Separate the wiring for safety observation function from other signal wiring.
- Protect the cables with appropriate ways (routing them in a cabinet, using a cable guard, etc.).
- We recommend using a switch, relay, sensor, etc. which comply with safety standards. When using a switch, relay, sensor, etc. which do not comply with safety standards, perform a safety confirmation.
- Keep the required clearance/creepage distance depending on voltage you use.
- The time to a safety observation error depends on parameter settings.

Safe torque off (STO)

This function only cuts off the torque of the motor, and does not cut off the power supply of the servo/inverter. Before servicing the servo/inverter, cut off the power supply and ensure that the servo/inverter are not energized.

2 Product Information

2.1 Model Number and Nameplate

Model number and nameplate

SV660 N S 2R8 I - FH
① ② ③ ④ ⑤ ⑥

① **Product series** SV660: SV660 series servo drive SV630: SV630 series servo drive SV635: SV635 series servo drive	④ **Rated output current**		⑤ **Installation mode** I: Baseplate-mounted
② **Product type** N: Network type P: Pulse type F: PROFINET	S: 220 V	1R6: 1.6 A 2R8: 2.8 A 5R5: 5.5 A 7R6: 7.6 A 012: 11.6A	⑥ **Customized function** Blank: Standard FH: High protection FS: STO
③ **Voltage class** S: 220 V T: 380 V	T: 380 V	3R5: 3.5 A 5R4: 5.4 A 8R4: 8.4 A 012: 12.0 A 017: 17.0 A 021: 21.0 A 026: 26.0 A	

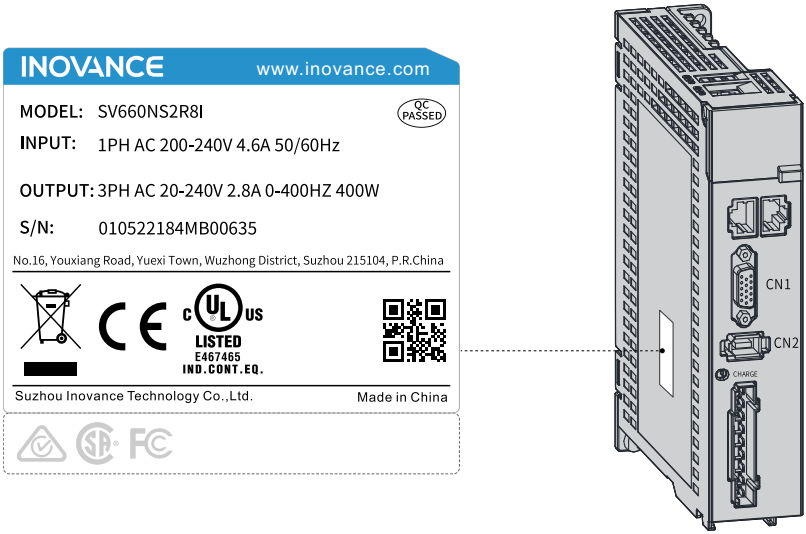

Encryption of the production serial number

01050202 4 H 7 00001
① ② ③ ④ ⑤

① **Internal code** Part number	③ **Year** 9: 2009 A: 2010 ... N: 2021 P: 2022 ... Note: I/L/O/Q is not used.	⑤ **Lot number** 00001: 1st in the month of manufacturing 00002: 2nd in the month of manufacturing 00003: 3rd in the month of manufacturing ... Range: 00001 to 99999
② **Manufacturer code** 4: Suzhou Inovance	④ **Month** 1: January 2: February ... A: October B: November C: December	

Example: The S/N 010502024H700001 indicates that the drive is manufactured in July, 2017.

2.2 Components of Servo Drives and Servo Motors

2.2.1 Servo Drives in Size A (Rated Power: 0.2 kW to 0.4 kW)

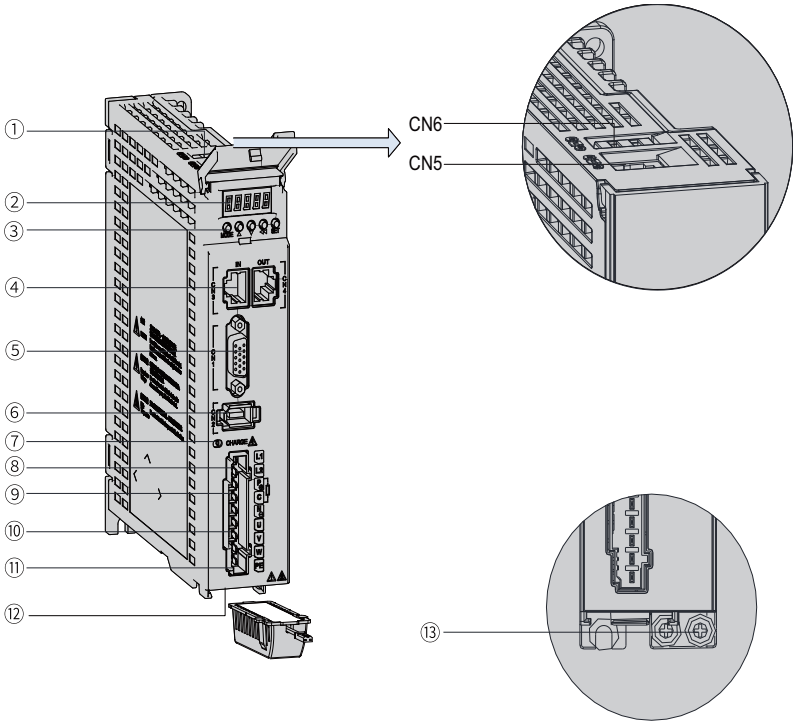

Figure 2-1 Components of servo drives in size A (SV660NS1R6I and SV660NS2R8I)

Table 2–1 Components of servo drives in size A (SV660NS1R6I and SV660NS2R8I)

No.	Name	Description
①	CN6 (STO safety function terminal)	Connected to external functional safety signal for functional safety purpose
	CN5 (communication terminal)	Connected to an RS232 communication instruction device
②	LED display	A 5-digit 8-segment LED display used to show the servo drive's operating status and parameter settings

No.	Name	Description
③	Keys	MODE: Used to switch parameters in sequence △: Used to increase the value of the blinking bit ▽: Used to decrease the value of the blinking bit ◁◁: Used to shift the blinking bit leftwards (Hold down: Turning to the next page when the displayed number exceeds five digits) SET: Used to save modifications and enter the next menu
④	CN3, CN4 (EtherCAT communication terminals)	CN3 (IN): Connected to the master or the preceding slave device CN4 (OUT): Connected to the next slave device
⑤	CN1 (control terminal)	Used for reference input signals and other I/O signals
⑥	CN2 (terminal for connecting the encoder)	Connected to the motor encoder terminal
⑦	CHARGE (bus voltage indicator)	Indicates that the bus capacitor carries electric charge. When this indicator is on, charges possibly still exist in the internal capacitor of the servo unit, even if the power supply of the main circuit is OFF. To avoid electric shock, do not touch the power terminals when this indicator is on.
⑧	L1, L2 (power input terminals)	See the nameplate for the rated voltage class.
⑨	P⊕, N⊖ (servo bus terminals)	Used when multiple servo drives share one DC bus
	P⊕, C (terminals for connecting an external braking resistor)	If an external braking resistor is needed, connect it between terminals P⊕ and C.
⑩	U, V, W (terminals for connecting the servo motor)	Connected to U, V, and W phases of the servo motor
⑪	Motor grounding terminal	Connected to the grounding terminal of the motor for grounding purpose
⑫	Battery location	Used to hold the battery box of the absolute encoder
⑬	Power supply grounding terminal	Connected to the grounding terminal of the power supply for grounding purpose

Note

The built-in regenerative resistor or jumper bar is not available in models S1R6 and S2R8. If an external regenerative resistor is needed for these models, connect it between terminals P⊕ and C.

2.2.2 Servo Drives in Size B (Rated Power: 0.75 kW)

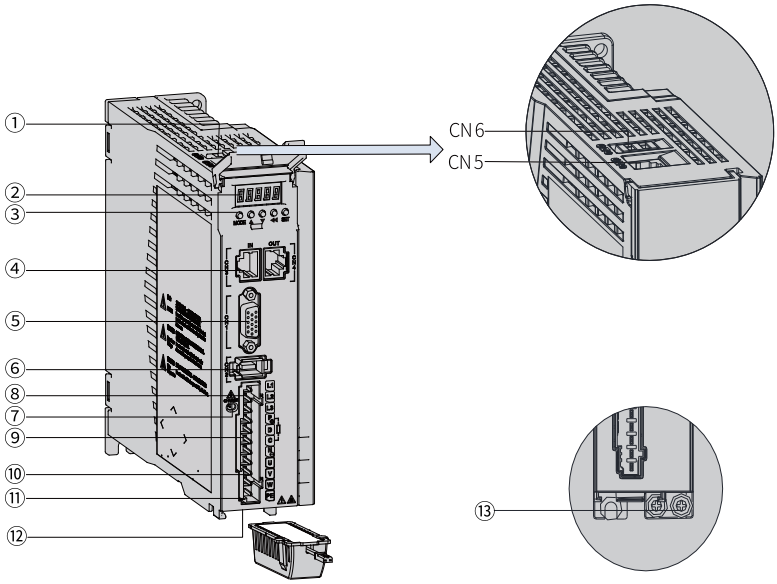

Figure 2-2 Components of servo drives in size B (SV660NS5R5I)

Table 2–2 Components of servo drives in size B (SV660NS5R5I)

No.	Name	Description
①	CN6 (STO safety function terminal)	Connected to external functional safety signal for functional safety purpose
	CN5 (communication terminal)	Connected to an RS232 communication instruction device
②	LED display	A 5-digit 8-segment LED display used to show the servo drive's operating status and parameter settings
③	Keys	MODE: Used to switch parameters in sequence △: Used to increase the value of the blinking bit ▽: Used to decrease the value of the blinking bit ◁◁: Used to shift the blinking bit leftwards (Hold down: Turning to the next page when the displayed number exceeds five digits) SET: Used to save modifications and enter the next menu

No.	Name	Description
④	CN3, CN4 (EtherCAT communication terminals)	CN3 (IN): Connected to the master or the preceding slave device CN4 (OUT): Connected to the next slave device
⑤	CN1 (control terminal)	Used for reference input signals and other I/O signals
⑥	CN2 (terminal for connecting the encoder)	Connected to the motor encoder terminal
⑦	CHARGE (bus voltage indicator)	Indicates that the bus capacitor carries electric charge. When this indicator is on, charges possibly still exist in the internal capacitor of the servo unit, even if the power supply of the main circuit is OFF. To avoid electric shock, do not touch the power terminals when this indicator is on.
⑧	L1, L2, L3 (power input terminals)	See the nameplate for the rated voltage class. Note: S5R5 (0.75 kW) models support single-phase 220 V input only, with a 220 V power supply connected between terminals L1 and L2.
⑨	P⊕, N⊖ (servo bus terminals)	Used when multiple servo drives share one DC bus
	P⊕, D, C (terminals for connecting an external braking resistor)	To connect an external braking resistor, remove the jumper between terminals P⊕ and D and connect the resistor between terminals P⊕ and C.
⑩	U, V, W (terminals for connecting the servo motor)	Connected to U, V, and W phases of the servo motor
⑪	Motor grounding terminal	Connected to the grounding terminal of the motor for grounding purpose
⑫	Battery location	Used to hold the battery box of the absolute encoder
⑬	Power supply grounding terminal	Connected to the grounding terminal of the power supply for grounding purpose

2.2.3 Servo Drives in Size C and Size D (Rated Power: 1.0 kW to 3.0 kW)

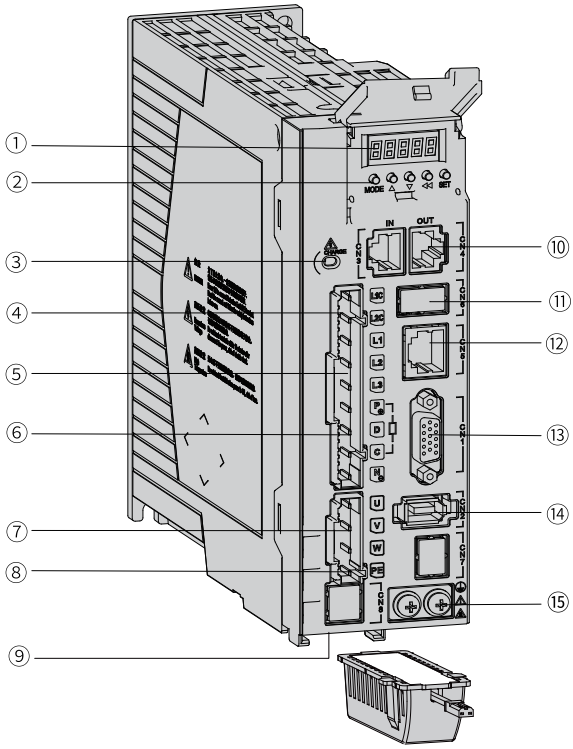

Figure 2-3 Components of servo drives in size C (SV660NS7R6I) and size D (SV660NS012I)

Table 2–3 Components of servo drives in size C (SV660NS7R6I) and size D (SV660NS012I)

No.	Name	Description
①	LED display	A 5-digit 8-segment LED display used to show the servo drive's operating status and parameter settings
②	Keys	MODE: Used to switch parameters in sequence △: Used to increase the value of the blinking bit ▽: Used to decrease the value of the blinking bit ◁◁: Used to shift the blinking bit leftwards (Hold down: Turning to the next page when the displayed number exceeds five digits) SET: Used to save modifications and enter the next menu
③	CHARGE (bus voltage indicator)	Indicates that the bus capacitor carries electric charge. When this indicator is on, charges possibly still exist in the internal capacitor of the servo unit, even if the power supply of the main circuit is OFF. To avoid electric shock, do not touch the power terminals when this indicator is on.

No.	Name	Description
④	L1C, L2C (control circuit power input terminals)	See the nameplate for the rated voltage class.
⑤	L1, L2, L3 (main circuit power input terminals)	Used as the power input terminals for a three-phase 220 V servo drive. See the nameplate for the rated voltage class.
⑥	P⊕, D, C (terminals for connecting an external braking resistor)	To connect an external braking resistor, remove the jumper between terminals P⊕ and D and connect the resistor between terminals P⊕ and C.
	P⊕, N⊖ (servo bus terminals)	Used when multiple servo drives share one DC bus
⑦	U, V, W (terminals for connecting the servo motor)	Connected to U, V, and W phases of the servo motor
⑧	Motor grounding terminal	Connected to the grounding terminal of the motor for grounding purpose
⑨	Battery location	Used to hold the battery box of the absolute encoder
⑩	CN3, CN4 (EtherCAT communication terminals)	CN3 (IN): Connected to the master or the preceding slave device CN4 (OUT): Connected to the next slave device
⑪	CN6 (STO safety function terminal)	Connected to external functional safety signal for functional safety purpose
⑫	CN5 (communication terminal)	Connected to an RS232 communication instruction device
⑬	CN1 (control terminal)	Used for reference input signals and other I/O signals
⑭	CN2 (terminal for connecting the encoder)	Connected to the motor encoder terminal
⑮	Servo drive grounding terminal	Connected to the grounding terminal of the power supply for grounding purpose

Note

The main circuits of models S7R6 and S012 can be connected to a single-phase or a three-phase power supply, depending on which one is available on site. No derating is required when a single-phase power supply is used for models S7R6 and S012.

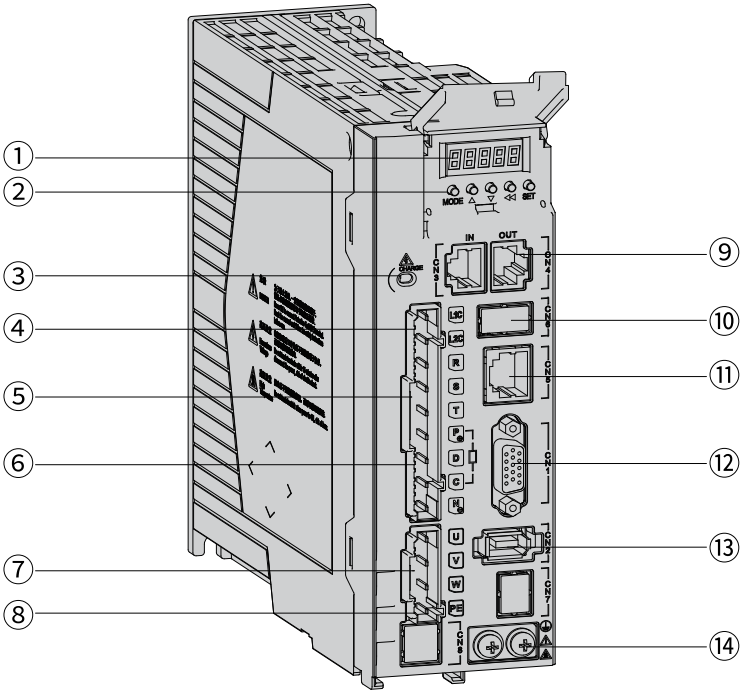

Figure 2-4 Components of servo drives in size C (SV660NT3R5I and SV660NT5R4I) and size D (SV660NT8R4I and SV660NT012I)

Table 2–4 Components of servo drives in size C (SV660NT3R5I and SV660NT5R4I) and size D (SV660NT8R4I and SV660NT012I)

No.	Name	Description
①	LED display	A 5-digit 8-segment LED display used to show the servo drive's operating status and parameter settings
②	Keys	MODE: Used to switch parameters in sequence △: Used to increase the value of the blinking bit ▽: Used to decrease the value of the blinking bit ◁◁: Used to shift the blinking bit leftwards (Hold down: Turning to the next page when the displayed number exceeds five digits) SET: Used to save modifications and enter the next menu
③	CHARGE (bus voltage indicator)	Indicates that the bus capacitor carries electric charge. When this indicator is on, charges possibly still exist in the internal capacitor of the servo unit, even if the power supply of the main circuit is OFF. To avoid electric shock, do not touch the power terminals when this indicator is on.

No.	Name	Description
④	L1C, L2C (control circuit power input terminals)	See the nameplate for the rated voltage class.
⑤	R, S, T (main circuit power input terminals)	See the nameplate for the rated voltage class.
⑥	P⊕, D, C (terminals for connecting an external braking resistor)	To connect an external braking resistor, remove the jumper between terminals P⊕ and D and connect the resistor between terminals P⊕ and C.
	P⊕, N⊖ (servo bus terminals)	Used when multiple servo drives share one DC bus
⑦	U, V, W (terminals for connecting the servo motor)	Connected to U, V, and W phases of the servo motor
⑧	Motor grounding terminal	Connected to the grounding terminal of the motor for grounding purpose
⑨	Battery location	Used to hold the battery box of the absolute encoder
⑩	CN3, CN4 (EtherCAT communication terminals)	CN3 (IN): Connected to the master or the preceding slave device CN4 (OUT): Connected to the next slave device
⑪	CN6 (STO safety function terminal)	Connected to external functional safety signal for functional safety purpose
⑫	CN5 (communication terminal)	Connected to an RS232 communication instruction device
⑬	CN1 (control terminal)	Used for reference input signals and other I/O signals
⑭	CN2 (terminal for connecting the encoder)	Connected to the motor encoder terminal
⑮	Servo drive grounding terminal	Connected to the grounding terminal of the power supply for grounding purpose

2.2.4 Servo Drives in Size E (Rated Power: 5.0 kW to 7.5 kW)

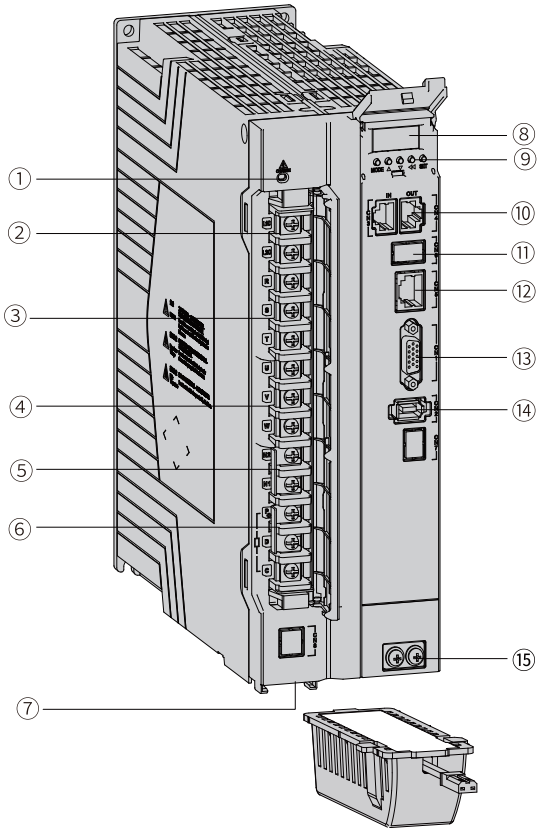

Figure 2-5 Components of servo drives in size E (SV660NT017I, SV660NT021I, and SV660NT026I)

Table 2–5 Components of servo drives in size E (SV660NT017I, SV660NT021I, and SV660NT026I)

No.	Name	Description
①	CHARGE (bus voltage indicator)	Indicates that the bus capacitor carries electric charge. When this indicator is on, charges possibly still exist in the internal capacitor of the servo unit, even if the power supply of the main circuit is OFF. To avoid electric shock, do not touch the power terminals when this indicator is on.
②	L1C, L2C (control circuit power input terminals)	See the nameplate for the rated voltage class.

No.	Name	Description
③	R, S, T (main circuit power input terminals)	See the nameplate for the rated voltage class.
④	U, V, W (terminals for connecting the servo motor)	Connected to U, V, and W phases of the servo motor
⑤	N2, N1 (terminals for connecting an external reactor)	N1 is shorted to N2 with a jumper by default. To suppress harmonics in the power supply, remove the jumper and connect an external DC reactor between terminals N1 and N2.
⑥	P⊕, D, C (terminals for connecting an external braking resistor)	To connect an external braking resistor, remove the jumper between terminals P⊕ and D and connect the resistor between terminals P⊕ and C.
⑦	Battery location	Used to hold the battery box of the absolute encoder
⑧	LED display	A 5-digit 8-segment LED display used to show the servo drive's operating status and parameter settings
⑨	Keys	MODE: Used to switch parameters in sequence △: Used to increase the value of the blinking bit ▽: Used to decrease the value of the blinking bit ◁◁: Used to shift the blinking bit leftwards (Hold down: Turning to the next page when the displayed number exceeds five digits) SET: Used to save modifications and enter the next menu
⑩	CN3, CN4 (EtherCAT communication terminals)	CN3 (IN): Connected to the master or the preceding slave device CN4 (OUT): Connected to the next slave device
⑪	CN6 (STO safety function terminal)	Connected to external functional safety signal for functional safety purpose
⑫	CN5 (communication terminal)	Connected to an RS232 communication instruction device
⑬	CN1 (control terminal)	Used for reference input signals and other I/O signals
⑭	CN2 (terminal for connecting the encoder)	Connected to the motor encoder terminal
⑮	Grounding terminal	Connected to the grounding terminals of the power supply and the motor

2.3 Electrical Specifications

- Single-phase 220 V drive

Item		Size A	Size B
Drive model		S2R8	S5R5
Drive power (kW)		0.4	0.75
Maximum output current (Arms)		10.1	16.9
Main circuit	Continuous output current (Arms)	2.8	5.5
	Main circuit power supply	Single phase 200 VAC to 240 VAC, –10% to +10%, 50 Hz/60 Hz	
	Energy loss (W)[1]	23.8	38.2
Control circuit	Control circuit power supply	Powered up by the bus, sharing the same power supply and rectification part with the main circuit	
	Energy loss (W)[1]	16	
Braking resistor	Resistance (Ω)	-	50
	Resistor power (W)	-	50
	Minimum resistance of external resistor (Ω)	45	40
	Maximum braking energy absorbed by capacitor (J)	26.29	22.41
	Braking resistor	External braking resistor	Built-in braking resistor

- Single-phase/three-phase 220 V drive

Item		Size C	Size D
Drive model		S7R6	S012
Drive power (kW)		1	1.5
Maximum output current (Arms)		23	32
Main circuit	Continuous output current (Arms)	7.6	11.6
	Power supply	Single-phase/three-phase 200 VAC to 240 VAC, –10% to +10%, 50 Hz/60 Hz	
	Energy loss (W)[1]	47.32	69.84
Control circuit	Control circuit power supply	Single phase 200 VAC to 240 VAC, –10% to +10%, 50 Hz/60 Hz	
	Energy loss (W)[1]	16	
Braking resistor	Resistance (Ω)	25	
	Resistor power (W)	80	
	Minimum resistance of external resistor (Ω)	20	15
	Maximum braking energy absorbed by capacitor (J)	26.70	26.70
	Braking resistor	Built-in braking resistor	

- Three-phase 380 V drive

Item	Size C		Size D		Size E		
Drive model	T3R5	T5R4	T8R4	T012	T017	T021	T026
Drive power (kW)	1	1.5	2	3	5	6	7.5
Maximum output current (Arms)	11	14	20	29.75	41.25	52.12	64.25

Item		Size C		Size D		Size E		
Main circuit	Continuous output current (Arms)	3.5	5.4	8.4	12	17	21	26
	Power supply	Three-phase 380 VAC to 440 VAC, –10% to +10%, 50 Hz/60 Hz						
	Energy loss (W)[1]	39.5	63.25	94.82	135.47	187.62	228.28	258.63
Control circuit	Control circuit power supply	Single phase 380 VAC to 440 VAC, –10% to +10%, 50 Hz/60 Hz						
	Energy loss (W)[1]	16						
Braking resistor	Resistance (Ω)	100	100	50	50	35	35	35
	Resistor power (W)	80	80	80	80	100	100	100
	Minimum resistance of external resistor (Ω)	80	60	45	40	35	25	25
	Maximum braking energy absorbed by capacitor (J)	34.28	34.28	50.41	50.41	82.67	100.82	100.82
	Braking resistor	Built-in braking resistor						

Note

- [1] Main circuit energy loss refers to the energy loss under rated output current of the servo drive.
- Select the external regenerative resistor according to actual operating conditions.

2.4 Basic Specifications

Item			Description
Basic specifications	Control mode		IGBT PWM control, sine wave current drive mode 220 V, 380 V: single-phase/three-phase full wave bridge rectification
	Encoder feedback		23-bit multi-turn absolute encoder, which can be used as an incremental encoder in absence of the battery
	Use conditions	Operating/Storage temperature[1]	0°C to 55°C (over 45°C: derate 10% for every additional 5°C)/–20°C to +70°C
		Operating/Storage humidity	Below 90% RH (non-condensing)
		Vibration resistance	4.9 m/s^2
		Impact resistance	19.6 m/s^2
		IP rating	IP20 Note: The IP rating of terminals is IP00.
		Pollution degree	PD2
		Altitude	Up to 5000 m 1000 m and below: no derating Above 1000 m: derate 1% for every additional 100 m. Above 2000 m: contact Inovance.
Speed/Torque control mode	Performance	Speed control range	1:6000 (The lower limit is the threshold within which the servo drive keeps running with the rated torque load.)
		Speed loop bandwidth	3 kHz
		Torque control accuracy (repeatability)	±2%
		Soft startup time	0s to 65s (This parameter can be set for acceleration and deceleration separately.)
	Input signal	Speed reference input	Source of network-type references: EtherCAT communication Local mode and local multi-speed supported
		Torque reference input	
Position control mode	Performance	Positioning time	1 ms to 10 ms
	Input signal	Position reference	Source of network-type references: EtherCAT communication Local mode supported
Position control mode	Digital input (DI) signal	Input signal function selection	5 DIs
			P-OT (Forward limit switch) N-OT (Reverse limit switch) HomeSwitch (Home switch) TouchProbe1 (Touch probe 1) TouchProbe2 (Touch probe 2)
	Digital output (DO) signal	Output signal function selection	3 DOs Load capacity: 50 mA Voltage range: 5 V to 30 V
			S-RDY: Servo ready TGON: Motor rotation output Comparison output, brake output, and EDM output

Item			Description
Built-in functions	Overtravel (OT) prevention		The servo drive stops immediately when P-OT or N-OT becomes active.
	Protection functions		Protections against overcurrent, overvoltage, undervoltage, overload, main circuit detection error, heatsink overheat, overspeed, encoder error, CPU error, and parameter error
	LED display		Main power supply CHARGE indicator, 5-digit LED display
	Vibration suppression		Four notches (including two adaptive notches), 50 Hz to 5000 Hz
	Communication functions	Connection protocol	RS232
		Communication protocol	EtherCAT
		Multi-station communication	Up to 255 slave stations
		Axis address setting	No physical knob, set to 0 to 255 through the software
		Function	Status display, user parameter setting, monitored value display, fault tracing display, jog and auto-tuning, and speed/torque reference signal observation
	Others		Gain tuning, alarm record, and jog

Note

[1] The temperature of the environment where the servo drive is installed must be within the range specified in the preceding table. When the servo drive is installed into a control cabinet, the temperature inside the cabinet must also be within this range.

2.5 Technical Data of EtherCAT Communication

Item		Specifications
Basic performance of slave	Communication protocol	EtherCAT protocol
	Service supported	CoE (PDO and SDO)
	Synchronization mode	DC - distributed clock
	Physical layer	100BASE-TX
	Baud rate	100 Mbit/s (100Base-TX)
	Duplex mode	Full duplex
	Topology	Linear
	Transmission medium	Shielded network cables of Cat 5e or higher
	Transmission distance	Less than 100 m between two nodes (with proper environment and cables)
	Number of slave stations	Up to 65535 by protocol, not exceeding 100 in actual use
	EtherCAT frame length	44 bytes to 1,498 bytes
	Process data	Up to 1,486 bytes per Ethernet frame
	Synchronization jitter of two slave stations	< 1 us
	Update time	About 30 us for 1,000 digital inputs and outputs About 100 us for 100 servo axes The value varies with the interface type.
	Communication code error rate	10^{-10} Ethernet standard
Configuration unit	Number of FMMU units	8
	Number of storage synchronization management units	8
	Process data RAM	8 kB
	Distributed clock	64 bits
	EEPROM capacity	32 kbit

2.6 Dimensions

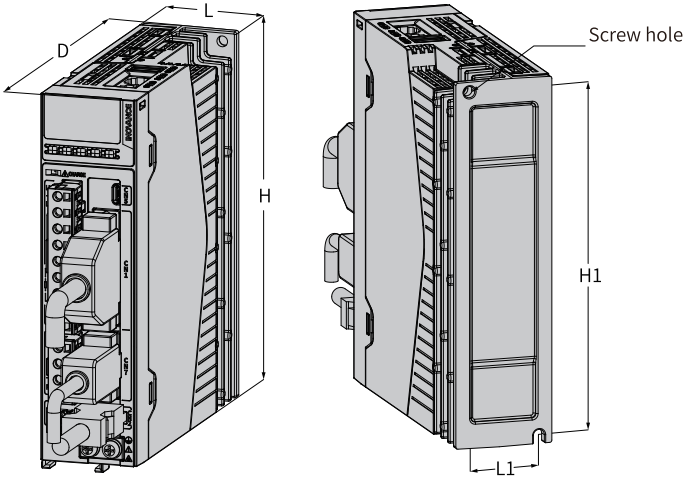

Size	L	H	D	L1	H1	D1	Screw Hole	Tightening Torque	Weight
	Unit: mm (in.)							Unit: N·m	Unit: kg (lb.)
A	40 (1.57)	170 (6.69)	150 (5.91)	28 (1.10)	161 (6.34)	75 (2.95)	2-M4	0.6 to 1.2	0.8 (1.76)
B	50 (1.97)	170 (6.69)	173 (6.81)	37 (1.46)	161 (6.34)	75 (2.95)	2-M4	0.6 to 1.2	1.0 (2.20)
C	55±1 (2.17±0.04)	170 (6.69)	173±1 (6.81±0.04)	44 (1.73)	160 (6.30)	75 (2.95)	2-M4	0.6 to 1.2	1.3 (2.87)
D	80±1 (3.15 ± 0.04)	170 (6.69)	183 (7.20)	71 (2.80)	160 (6.30)	75 (2.95)	3-M4	0.6 to 1.2	1.8 (3.97)
E	90 (3.54)	250 (9.84)	230 (9.06)	78 (3.07)	240.5 (9.47)	75 (2.95)	4-M4	0.6 to 1.2	3.6 (7.94)

3 Installation

Read through the safety instructions in Chapter "Fundamental Safety Instructions". Failure to comply may result in serious consequence.

Caution

- Observe the installation direction described in this chapter. Failure to comply may result in equipment fault or damage.
- Do not install or operate damaged or defective equipment. Failure to comply can result in personal injury.
- Do not install the equipment in environments exposed to water splashes or corrosive gases. Failure to comply can result in equipment fault.
- Do not install the equipment near inflammable gases or combustible objects. Failure to comply can result in a fire or electric shock.
- Install the equipment inside a fire-proof cabinet that provides electrical protection. Failure to comply may result in a fire.
- Ensure the specified clearance is reserved among the servo drive, the interior surface of the control cabinet, and other machines. Failure to comply can result in a fire or equipment fault.
- Do not put heavy objects on the equipment. Failure to comply may result in personal injury or equipment damage.
- Do not subject the equipment to strong shock. Failure to comply may result in equipment damage.
- Do not block the air inlet/outlet of the equipment or allow unwanted objects to fall into the equipment. Failure to comply may result in a fire or equipment fault.

3.1 Unpacking and Transportation

Check the following items upon unpacking.

Item	Description
Check whether the delivered product is consistent with your order.	Check whether the servo drive model and specifications comply with your order. See the dimensions of the packing box in *"Table 3–1 " on page 39*. The deliverables include the product, cushion, carton box, and screw bag, as shown in *"Figure 3–1 " on page 39* .
Check whether the product is intact.	Check whether the product delivered is in good condition. If there is any missing or damage, contact Inovance or your supplier immediately.

Table 3–1 Dimensions of the outer packing box

Size	Drive Model SV660N****I	Outer Width (mm)	Outer Height (mm)	Outer Depth (mm)	Weight (kg)
A	S1R6 and S2R8	250.0	90.0	195	0.96
B	S5R5	225.0	90	205.0	1.17
C	S7R6, T3R5, and T5R4	235.0	105.0	215.0	1.48
D	S012, T8R4, and T012	235.0	130.0	225.0	2.02
E	T017, T021, and T026	320.0	150.0	280.0	3.94

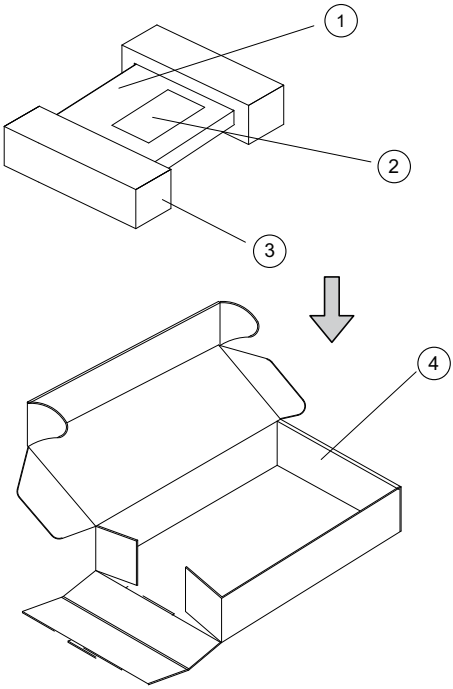

Figure 3-1 Contents in the packing box

No.	Name
①	Product
②	Terminal accessories (varying with product models)
③	Cushion
④	Carton

3.2 Installation Environment

Table 3–2 Environment requirements

Item	Requirement
Installation location	Indoors
Grid overvoltage	Overvoltage Class III (OVC III)
Altitude	Up to 2000 m • 1000 m and below: no derating • Above 1000 m: derate 1% for every additional 100 m. • Above 2000 m: contact Inovance.
Temperature	• Installation/Operation: 0°C to + 55°C (0°C to + 45°C: no derating; over +45°C: derate 2% for every additional 1°C) • Storage/Transportation: –40°C to +70°C • To improve the reliability of the machine, use the servo drive in environments without dramatic temperature change. • When installing the servo drive into an enclosed environment such as a control cabinet, use a cooling fan or air conditioner to keep the temperature of the inlet air below 45°C. Failure to comply will result in overheat or fire. • Install the servo drive on the surface of an incombustible object and leave sufficient surrounding space for heat dissipation. • Take measures to prevent the servo drive from being frozen.
Ambient humidity	Below 90% RH (non-condensing)
Storage humidity	Below 90% RH (non-condensing)
Vibration	Below 4.9 m/s^2 • During transportation with packing box: compliant with EN 60721-3-2 Class 2M3 • During installation without packing box: compliant with ISTA 1H
Impact	Below 19.6 m/s^2
IP rating	IP20
Environment	Pollution Degree 2 and below Install the servo drive in a place that meets the following requirements: • Free from direct sunlight, dust, corrosive gas, explosive and inflammable gas, oil mist, vapor, water drop, and salty element • Insusceptible to vibration (away from equipment that may generate strong vibration, such as a punch press) • Free from unwanted objects such as metal powder, oil, and water inside the servo drive • Free from radioactive substances, combustible materials, harmful gases and liquids, and salt corrosion • Away from combustible materials such as wood • Do not use the equipment in vacuum.

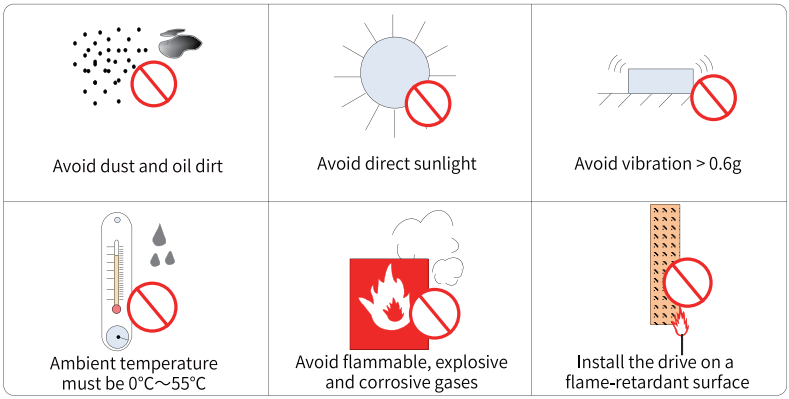

Figure 3-2 Environment requirements

3.3 Installation Clearance

Servo drives with different power ratings require different installation clearances. When installing multiple servo drives side by side, reserve a clearance of at least 10 mm (0.39 in.) between adjacent servo drives and a clearance of at least 50 mm (1.97 in.) above and below each servo drive for heat dissipation.

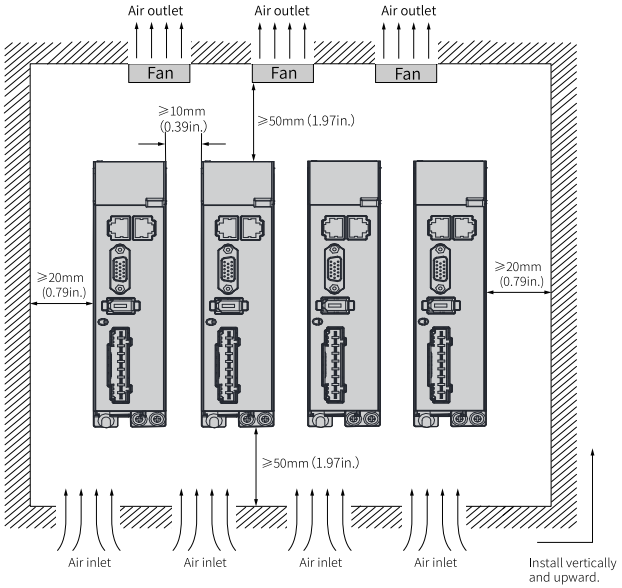

Figure 3-3 Clearance for side-by-side installation

Servo drives rated at 0.2 kW to 0.75 kW (size A and size B) support compact installation, in which a clearance of at least 1 mm (0.04 in.) must be reserved between every two servo drives. When adopting compact installation, derate the load rate to 75%.

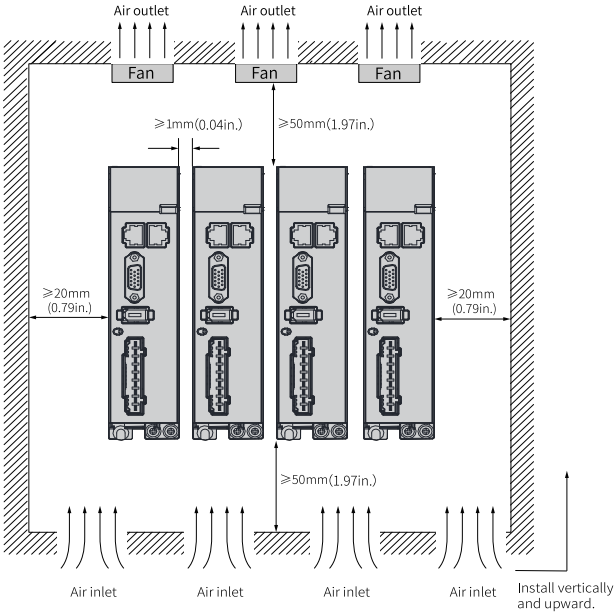

Figure 3-4 Clearance for compact installation

Servo drives in sizes C, D, and E (rated power: 1.0 kW to 7.5 kW) support zero-clearance installation, without the need for derating.

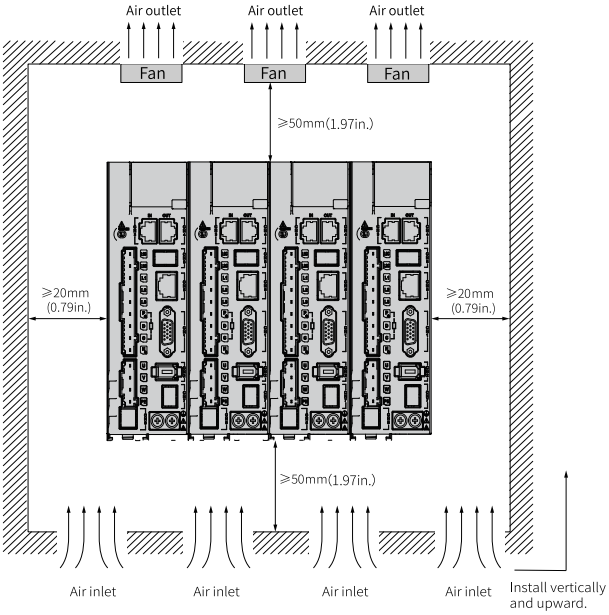

Figure 3-5 Zero-clearance installation

3.4 Installation Dimensions

Servo drives in size A (rated power: 0.2 kW to 0.4 kW): SV660NS1R6I and SV660NS2R8I

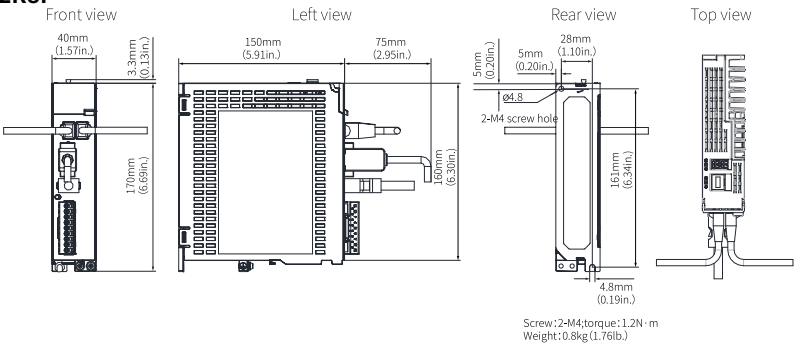

Figure 3-6 Outline dimensions of servo drives in size A

Servo drives in size B (rated power: 0.75 kW): SV660NS5R5I

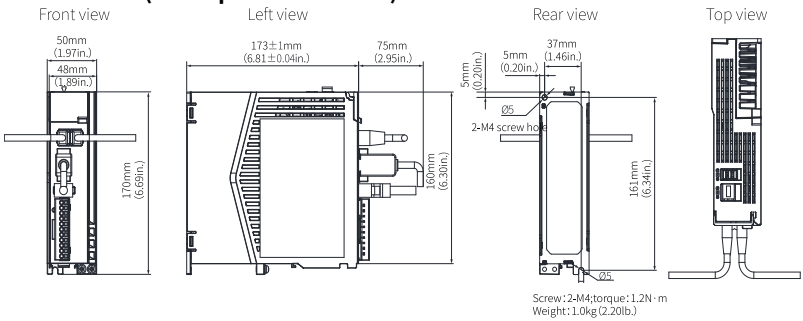

Figure 3-7 Outline dimensions of servo drives in size B

Servo drives in size C (rated power: 1.0 kW to 1.5 kW): SV660NS7R6I, SV660NT3R5I, and SV660NT5R4I

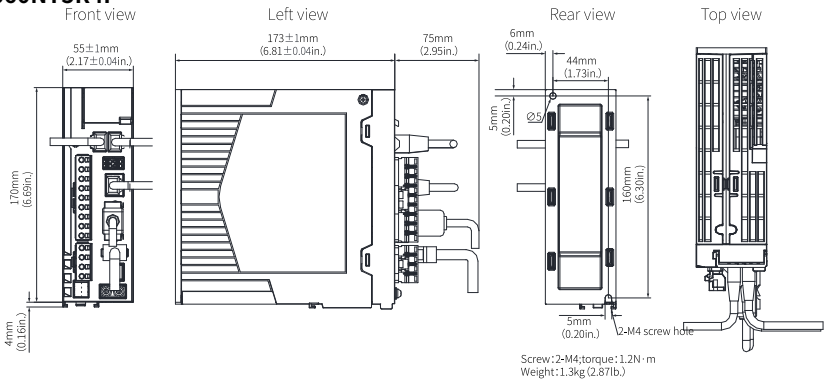

Figure 3-8 Outline dimensions of servo drives in size C

Servo drives in size D (rated power: 1.5 kW to 3.0 kW): SV660NS012I, SV660NT8R4I, and SV660NT012I

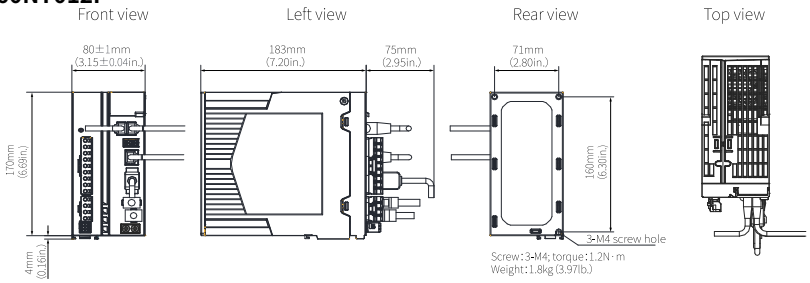

Figure 3-9 Outline dimensions of servo drives in size D

Servo drives in size E (rated power: 5.0 kW to 7.5 kW): SV660NT017I, SV660NT021I, and SV660NT026I

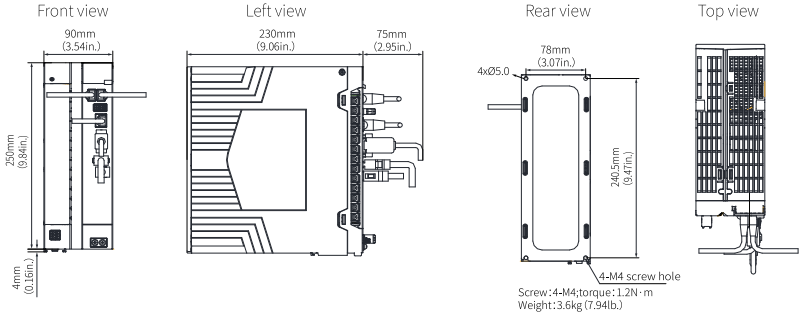

Figure 3-10 Outline dimensions of servo drives in size E

3.5 Installation Precautions

Table 3–3 Installation precautions

Item	Description
Method	• Install the servo drive vertically and upward to facilitate heat dissipation. For installation of multiple servo drives inside the cabinet, install them side by side. For dual-row installation, install an air guide plate. • Make sure that the servo drive is installed vertically to the wall. Cool the servo drive down with natural convection or a cooling fan. Secure the servo drive to the mounting surface through two to four mounting holes (the number of mounting holes depends on the capacity of the servo drive). • Install the servo drive vertically to the wall, with its front (actual mounting surface) facing the operator. • The mounting bracket (if needed) must be made of incombustible materials.
Cooling	As shown in *"3.4 Installation Dimensions" on page 43*, reserve sufficient space around the servo drive to ensure good heat dissipation through the cooling fan or natural convection. Take the heat dissipated by other devices inside the cabinet into consideration. Install a cooling fan to the upper part of the servo drive to avoid local excessive temperature rise and keep an even temperature inside the control cabinet.
Grounding	Ground the grounding terminal properly. Failure to comply may result in electric shock or malfunction due to interference.

Item	Description
Cable routing requirements	As shown in the figure below, route the servo drive cables downwards to prevent liquid from flowing into the servo drive along the cables. 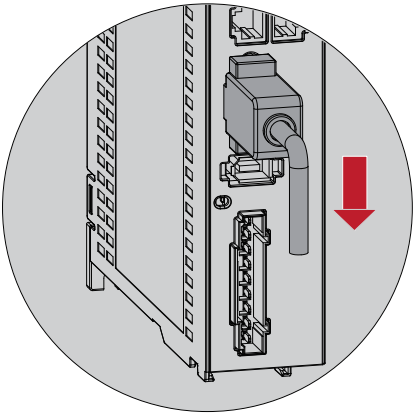 Route the servo drive cables downwards.
Dust-proof cover (included in the standard configuration)	Insert the dust-proof cover into the communication port (CN5/CN6) not in use. This is to prevent unwanted objects, such as solids or liquids, from falling into the servo drive and resulting in faults. Each servo drive is delivered with two dust-proof covers inserted into the communication ports by default. You can place an order for more dust-proof covers as needed (model: NEX-02-N2B; manufacturer: PINGOOD). 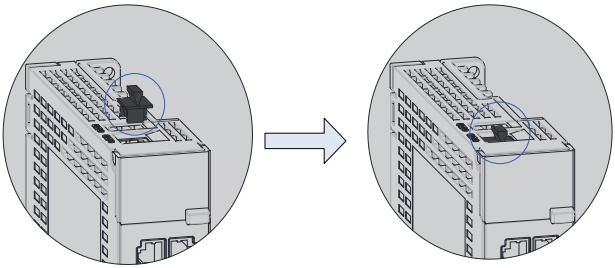 **NOTE:** • Dust-proof cover: Prevents unwanted objects, such as solids or liquids, from falling into the servo drive and resulting in faults. • Dust-proof covers are delivered along with the servo drive. Keep the dust-proof covers in a proper place.

3.6 Installation Guide

The servo drive supports backplate mounting only.

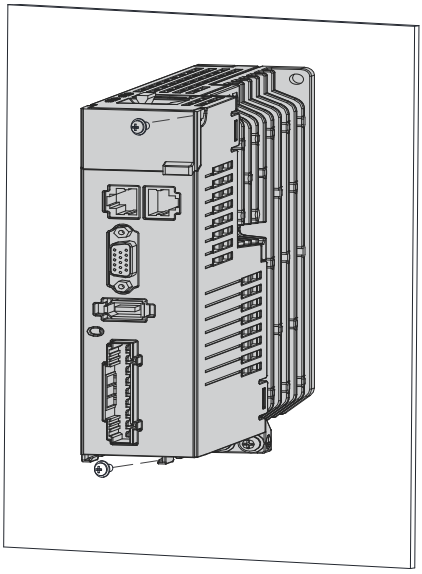

Figure 3-11 Backplate mounting

Note

- Servo drives in sizes A and C are secured by two screws, with one screw on the top and the other one at the bottom.
- Servo drives in size D are secured by three screws, with two screws on the top and another one at the bottom.
- Servo drives in size E are secured by four screws, with two screws on the top and the other two at the bottom.

4 Wiring

4.1 Rules



Read through the safety instructions in Chapter "Fundamental Safety Instructions". Failure to comply may result in serious consequences.

- Do not use the power from IT system for the servo drive. Use the power from TN/TT system for the drive. Failure to comply may result in an electric shock.
- Connect an electromagnetic contactor between the input power supply and the main circuit power supply of the drive (L1, L2 for single-phase; L1, L2, L3/R, S, T for three-phase) to form a structure allowing independent power cutoff on the power supply side of the drive. This is to prevent fire accident caused by continuous high current generated upon fault.
- Check that the input power supply of the drive is within the specified voltage range. Failure to comply may result in faults.
- Do not connect the output terminals U, V, and W of the drive to a three-phase power supply. Failure to comply may result in physical injury or a fire.
- Do not connect the motor terminals U, V, and W to a mains power supply. Failure to comply may result in physical injury or a fire.
- Use the ALM (fault) signal to cut off the main circuit power supply. A faulty braking transistor may overheat the regenerative resistor and lead to a fire.
- Connect the PE terminal of the drive to the PE terminal of the control cabinet. Failure to comply may result in an electric shock.
- Ground the entire system properly. Failure to comply may result in equipment malfunction.
- After the power supply is cut off, residual voltage is still present in the internal capacitor of the drive, wait for at least 15 min before further operations. Failure to comply may result in an electric shock.



- The specification and installation of external cables must comply with applicable local regulations.
- Observe the following requirements when the servo drive is used on a vertical axis.
  - Set the safety device properly to prevent the workpiece from falling upon warning or overtravel.
  - Ensure the positive/negative polarity of the 24 V power supply is correct. Otherwise, the axis may fall and cause personal injury or equipment damage.
- Observe the following requirements during wiring of the power supply and main circuit:
  - When the main circuit terminal is a connector, remove the connector from the servo drive before wiring.
  - Insert one cable into one cable terminal of the connector. Do not insert multiple cables into one cable terminal.
  - When inserting cables, take enough care to prevent the cable conductor burrs from being short circuited to the neighboring cable.
  - Insulate the connecting part of the power supply terminals to prevent electric shock.
  - Do not connect a 220 V servo drive to a 380 V power supply directly.
  - Install safety devices such as a circuit breaker to prevent short circuit in external circuits. Failure to comply may result in a fire.
  - Cut off the main circuit power supply and switch off the S-ON signal after an alarm signal is detected.
- Connect the servo drive to the motor directly. Do not use an electromagnetic contactor during wiring. Failure to comply may result in equipment fault.
- Do not put heavy objects onto cables or pull cables with excessive force. Failure to comply may result in cable damage, leading to an electric shock.
- When connecting DO terminals to relays, ensure the polarity of the flywheel diode is correct. Wrong polarity will result in equipment damage or signal output failure.
- Keep a distance of at least 30 cm between main circuit cables and I/O signal cables/encoder cables. Failure to comply may result in equipment malfunction.
- Use twisted pairs or multi-conductor shielded twisted pairs as the I/O signal cable or encoder cable. Failure to comply may result in equipment malfunction.
- The maximum wiring lengths of the I/O signal cable and the encoder cable are 3 m and 10 m respectively.
- Use a power supply filter to reduce the electromagnetic interference on electronic devices surrounding the servo drive.
- Take proper shielding measures in the following locations to prevent equipment damage:
  - Locations with interference caused by static electricity

- Locations with strong electric field or magnetic field
- Locations with radioactive rays

4.2 Main Circuit Wiring Requirements

Servo drive power input cables and motor cables may generate strong electromagnetic interference. To prevent the electromagnetic interference incurred by long-distance parallel routing and coupling between disturbing cables and control cables, keep a clearance of at least 30 cm between main circuit cables and signal cables. Main circuit cables include the RST cable, UVW cable, DC bus, and braking cable. Signal cables include the I/O signal cable, communication cable, and encoder cable.

Cable ducts must be connected and grounded properly. Aluminum cable ducts can be used to ensure equipotentiality of the device. The filter, servo drive, and motor must be properly connected to systems (machines or devices), with spraying protection applied at the installation part and the conductive metal kept in full contact.

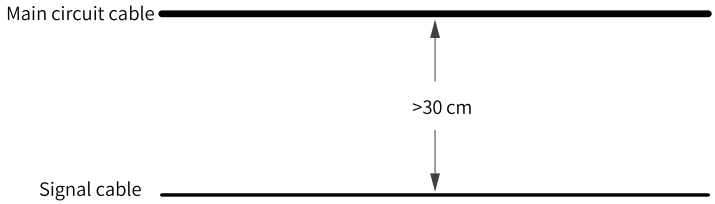

Figure 4-1 Cable layout

Wiring requirements

The wiring mode compliant with the Low Voltage Directive is supported.

- Terminals P⊕, C, and N⊖ are used to connect optional parts. Do not connect these terminals to an AC power supply.
- To protect the main circuit, separate and cover the surface that may come into contact with the main circuit.
- Prevent foreign objects from entering the wiring area of the terminal block.
- Do not solder the twisted conductors.
- The tightening torque may vary with terminals. Tighten terminal screws with the specified tightening torque. You can use a torque screwdriver, torque ratchet, or torque wrench to tighten terminal screws.
- When using an electric screwdriver to tighten terminal screws, set the electric screwdriver to low speed to prevent damage to the terminal screws.

- Tighten the terminal screws with an angle not greater than 5°. Failure to comply may damage the terminal screws.

4.3 CN6 (STO Safety Terminal)

Note

The CN6 STO safety function terminal is only suitable for non-standard models (-FS).

Terminal arrangement

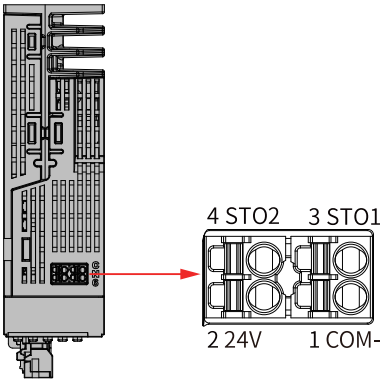

Table 4–1 STO safety terminal pins of servo drives

Pin No.	Definition	Description
1	COM–	STO reference ground
2	24V	Internal 24 V power supply
3	STO1	Control input for STO1
4	STO2	Control input for STO2

Two isolated inputs are configured to dual-channel inputs of the STO function: STO1/ STO2.

To facilitate commissioning, additional pin with supply voltage (+24 V) is integrated. The bridging of the 24 V terminal to STO1/STO2 is needed in case the safety circuit is installed but no STO function is needed.

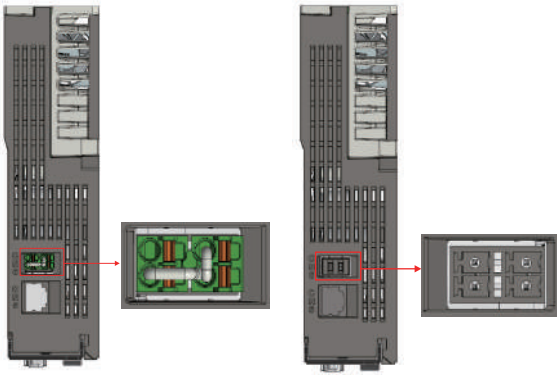

Terminal description

- **Electrical specifications and connections of input circuit**
  This section describes the characteristics of the input signals assigned to the CN6 connectors.
  - Specifications
    The servo drive operates normally only when the input states of STO1 and STO2 are both "High" ("1" or "H").

    The servo drive does not operate when the input states of STO1 and STO2 are different or are both "Low" ("0" or "L").
  - The following table describes the electrical characteristics of Safety Request Input Signal.

Item	Characteristics	Description
Voltage range	24 VDC (±15%)	-
Input current	3.6 mA (Typ.)	This is the value per channel.
Standards of logic levels	"0" < 5 V, "1" >15 V	-
Digital input impedance	5.4 kΩ	-

  - Example connection of external 24 V

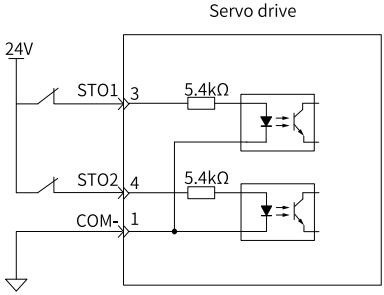

- Example connection of internal 24 V

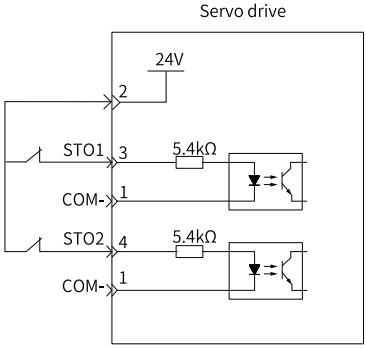

- **EMC requirements**
  - To avoid short circuit between two adjacent conductors, either use cable with shield connected to the protective bonding circuit on each separate conductor, or use flat cables with one earthed conductor between each signal conductor.
  - Double-shielded or single-shielded twisted multi-pair cable is strongly recommended.
  - Fix and ground the cable shield using a piece of conductive metal. Example of cable clamp:

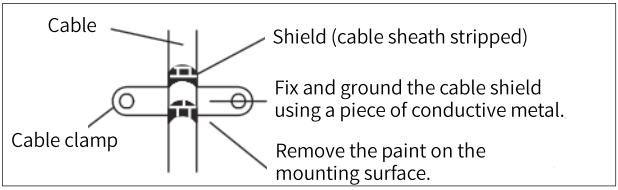

  - The maximum allowable cable length between the drive and the activation switch is 30 m.
- **Additional requirements**
  - All wiring must be well protected, routed and clamped where practicable.

- It must be assured that there is no pulling or pinching on the cable when installing.
- For cabling the DI inputs of the STO, to avoid common cause failure in the cables, the two channels must be routed through two well-apart routes, or the cable must be protected with double-shielded methods.

Cable	Description
Category	Low voltage, double-shielded or single-shielded twisted multi-pair cable
Maximum size	0.8 mm^2 (18 AWG)
Minimum size	0.3 mm^2 (28AWG)
Maximum length	30 m between STO inputs and the operating contact

Applicable servo drives

STO applies to FS servo drives in the following table.

Size	Power Range	Structure	W × H × D (mm^3)
A	0.2 kW to 0.4 kW	Integrated structure	40 × 170 × 150
B	0.75 kW	Integrated structure	50 × 160 × 173
C	1 kW to 1.5 kW	Split-type structure	55 × 170 × 173
D	1.8 kW to 3 kW	Split-type structure	75 × 170 × 183
E	5 kW to 7.5 kW	Split-type structure	90 × 250 × 230

5 Keypad

5.1 Panel Components

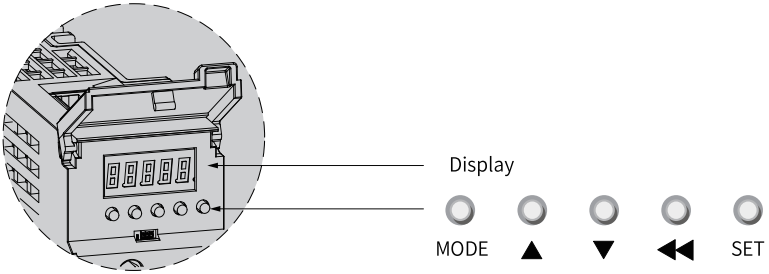

Figure 5-1 Magnified view of the operating panel

The operating panel of the SV660N series servo drive consists of an LED display (5-digit, 8-segment) and five keys. The operating panel is used for value display, parameter setting, user password setting, and general function execution. The following table takes parameter setting as an example to describe the general functions of the keys.

Table 5–1 General functions of keys

Name	Diagram	Description
MODE	MODE	Switches among different modes. Returns to the previous menu.
UP	▲	Increases the value of the blinking digit for the LED.
DOWN	▼	Decreases the value of the blinking digit for the LED.
SHIFT	◀◀	Shifts the blinking digit for the LED. You can view the high digits of the number consisting of more than 5 digits.
SET	SET	Switches to the lower-level menu. Executes commands such as saving parameter settings.

5.2 Panel Display

The operating panel can be used to display the servo drive status, parameters, faults, and monitored values.

- Status display: Displays current servo drive status, such as servo ready or servo running.
- Parameter display: Displays parameters and their setpoints.
- Fault display: Displays faults and warnings that occurred on the servo drive.
- Monitored value display: Displays values of monitoring parameters.

Mapping relation between operating panel display and object dictionary

The mapping relation between the parameter displayed on the operating panel (in decimal) and the object dictionary operated by the host controller (in hexadecimal, "Index" and "Sub-index") is as follows.

Object dictionary index = 0x2000 + Parameter group number

Object dictionary sub-index = Hexadecimal offset within the parameter group + 1 For example:

Panel Display	Object Dictionary Operated by the Host Controller
H02.15	2002.10h

Note

The following section only describes the display and parameter settings on the keypad side (in decimal), which are different from those displayed in the software tool (in hexadecimal). Make necessary value conversions during use.

Display mode switchover

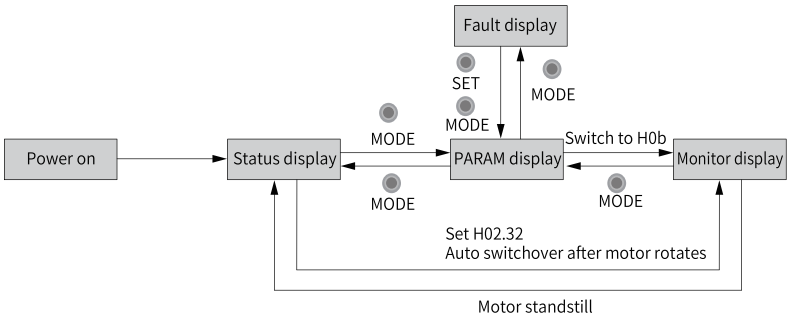

Figure 5-2 Switchover among different display modes

- The operating panel enters status display immediately upon power-on.

- Press MODE to switch among different display modes based on the conditions shown in *"Figure 5–2 " on page 56* .
- In status display, set H02.32 to select the parameter to be monitored. When the motor rotates, the operating panel automatically switches to monitored value display. After the motor stops, the operating panel automatically returns to status display.
- In the parameter display mode, after you select the parameter to be monitored in group H0b, the operating panel switches to monitored value display.
- Once a fault occurs, the operating panel switches to fault display immediately, with all the five LEDs blinking. Press SET to stop the LEDs from blinking, and then press MODE to switch to parameter display.

Status display

Display	Name	Applicable Occasion	Meaning
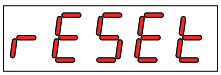	reset Servo initializing	At the moment upon power-on	The servo drive is in the initialization or reset status. After initialization or reset is done, the servo drive automatically switches to other status.
	nr Servo not ready	Initialization done, but servo drive not ready	The servo drive is not ready to run because the main circuit is not powered on. For details, see Chapter "Troubleshooting".
	ry Servo ready	Servo drive ready	The servo drive is ready to run and is waiting for the S-ON signal.
	rn Servo running	Servo ON (S-ON) signal activated (S-ON signal switched on)	The servo drive is running.
	1 to A: Control modes	-	Displays present operation mode of the servo drive in hexadecimal digits. 1: Profile position control 3: Profile velocity mode 4: Profile torque mode 6: Homing mode 8: Cyclic synchronous position mode 9: Cyclic synchronous velocity mode A: Cyclic synchronous torque mode

Display	Name	Applicable Occasion	Meaning
	1 to 8: Communication status	-	Displays the status of the slave EtherCAT state machine in characters. 1: Initialization 2: Pre-operational 4: Safe-operational 8: Operational
	- CN4 connection indication	CN4 indicates the EtherCAT output connection status.	OFF: No communication connection is detected in the physical layer. ON: A communication connection is detected in the physical layer.
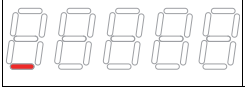	- CN3 connection indication	CN3 indicates the EtherCAT input connection status.	

Parameter display

Parameters are divided into 14 groups based on their functions. A parameter can be located quickly based on the parameter group it belongs to. For the list of parameters, see Chapter List of Parameters.

- Display of parameter groups

Display	Name	Description
HXX.YY	Parameter group	XX: Parameter group number (hexadecimal) YY: Offset within the parameter group (decimal)

For example, "H02.00" is displayed as follows.

Display	Name	Description
	H02.00	02: Parameter group number 00: Offset within the parameter group

- Display of negative numbers and numbers with different lengths
  - Signed number with 4 digits and below or unsigned number with 5 digits and below

    Such numbers are displayed in a single page (five digits). For signed numbers, the highest bit "–" represents the negative sign.

    For example, "–9999" is displayed as follows.

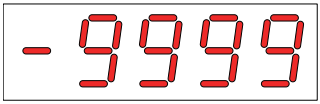

For example, "65535" is displayed as follows.

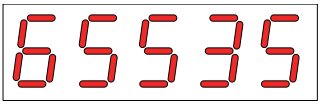

- Signed number with more than 4 digits or unsigned number with more than 5 digits
  Such numbers are displayed from low to high bits in several pages (5 digits per page) in the format of "current page + values on current page", as shown in the following figure. Hold down SHIFT for more than 2s to switch to the next page.

  For example, "–1073741824" is displayed as follows.

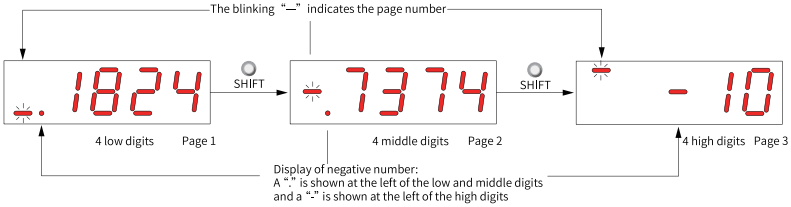

Figure 5-3 Display of "–1073741824"

For example, "1073741824" is displayed as follows.



Figure 5-4 Display of "1073741824"

- Display of the decimal point
  The segment "." of the ones indicates the decimal point, which does not blink.

Display	Name	Description
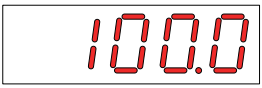	Decimal point	100.0

- Display of parameter setting status

Display	Name	Applicable Occasion	Meaning
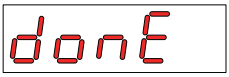	Done (parame ter setting done)	The parameter is set successfully.	The parameter is set and saved to the servo drive (Done). The servo drive can execute other operations.
	F.InIt (restored to default)	Parameter initialization is in progress (H02.31 = 1).	The servo drive is in the process of parameter initialization. Switch on the control circuit again after initialization is done.
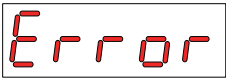	Error (wrong password)	The user password (H02.30) is enabled and the password entered is wrong.	A wrong password is entered. You need to enter the password again.
	TunE	Auto-tuning with one-key enabled	The function of auto-tuning with one-key is in progress.
	FAIL	Auto-tuning with one-key enabled	The function of auto-tuning with one-key fails.

Fault display

- The operating panel can be used to display present or previous fault and warning codes. For analysis and solutions to the faults and warnings, see Chapter "Troubleshooting".
- When a fault or warning occurs, the operating panel displays the corresponding fault or warning code immediately. When multiple faults or warnings occur, the operating panel displays the fault code of the highest fault level.
- You can select the previous fault/warning to be viewed through H0b.33 and view the code of the selected fault/warning in H0b.34.
- You can clear the latest 10 faults or warnings saved in the servo drive by setting H02.31 to 2.

For example, "E941.0" is displayed as follows.

Display	Name	Description
	E941.0 Warning code	E: A fault or warning occurs on the servo drive. 941.0: Warning code

Monitored value display

- Group H0b: Displays parameters used to monitor the operating state of the servo drive.
- Set H02.32 (Default operating panel display) properly. After the servo motor operates normally, the operating panel switches from status display to parameter display. The parameter group number is H0b and the offset within the group is the setpoint of H02.32.
- For example, if H02.32 is set to 00 and the motor speed is not 0 RPM, the operating panel displays the value of H0b.00.

The following table describes the monitoring parameters in H0b.00.

Para. No.	Name	Unit	Meaning	Example
H0b.00	Actual motor speed	RPM	Displays the actual value of the motor speed after round-off, which can be accurate to 1 RPM.	Display of 3000 RPM: 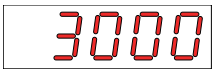 Display of –3000 RPM: 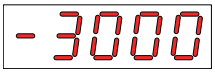

Note

For details of parameter group H0b, see Operating Panel Monitoring Display in the related commissioning guide.

5.3 Parameter Settings

Example of parameter settings

You can set parameters through the operating panel. For details on parameters, see Chapter "Parameters". The following figure shows how to switch from position control mode to speed control mode using the operating panel after power-on.

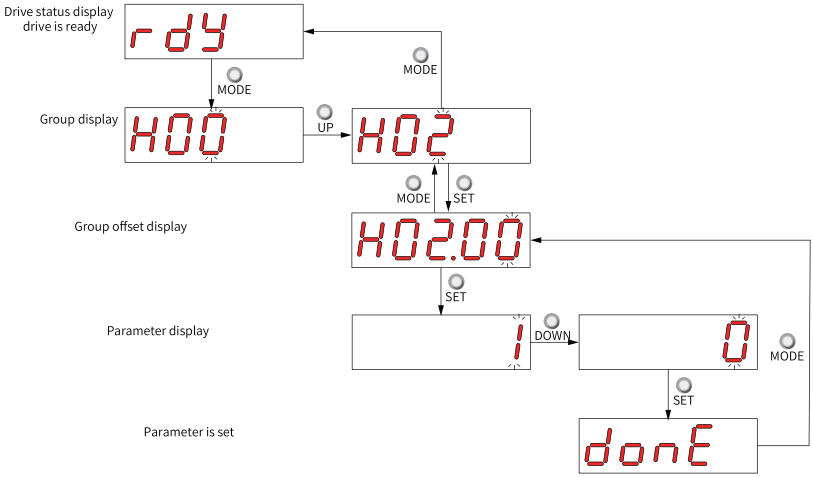

Figure 5-5 Example of parameter settings

- MODE: Used to switch the operating panel display mode and return to the previous screen
- UP/DOWN: Used to increase or decrease the value of the blinking digit
- SHIFT: Used to shift the blinking digit
- SET: Used to save the present setpoint or switch to the next screen

After parameter setting is done, that is, "donE" is displayed on the operating panel, press MODE to return to parameter display (the "H02.00" screen).

Forced DI/DO signals

There are five DI signals and three DO signals on CN1 of SV660N. You can assign different functions and logic to DIs/DOs by setting parameters in groups H03 and H04 through the operating panel (or host controller communication), so that the host controller can control corresponding servo functions through DI signals or use DO signals output by the servo drive.

The servo drive also provides forced DI/DO functions. The forced DIs can be used to test the DI functions of the servo drive, and the forced DOs can be used to check the DO signal connection between the host controller and the servo drive.

Table 5–2 DI/DO function definitions

No.	Name	Function	Description	Remarks
Consisting of two digits which indicate the function number				
Functions of DI Signals				

No.	Name	Function	Description	Remarks
01	S-ON	Servo ON	Inactive: Servo motor disabled in local mode Active: Servo motor enabled in local mode	The S-ON function is only active in non-bus control mode. The corresponding terminal logic must be level-triggered.
02	ALM-RST	Fault reset	Active: Fault reset executed in local mode Inactive: Fault reset not executed in local mode	The ALM-RST function is only active in non-bus control mode. The corresponding terminal logic is recommended to be level-triggered.
14	P-OT	Positive limit switch	Active: Forward drive inhibited Inactive: Forward drive permitted	Overtravel prevention applies when the load moves beyond the limit. The corresponding terminal logic is recommended to be level-triggered.
15	N-OT	Negative limit switch	Active: Reverse drive inhibited Inactive: Reverse drive permitted	Overtravel prevention applies when the load moves beyond the limit. The corresponding terminal logic is recommended to be level-triggered.
31	HomeSwitch	Home switch	Inactive: Mechanical load beyond the home switch range Active: Mechanical load within the home switch range	The corresponding terminal logic must be level-triggered.
34	EmergencyStop	Emergency stop	Active: Position lock applied after stop at zero speed Inactive: Current operating state unaffected	The corresponding terminal logic is recommended to be level-triggered.
38	TouchProbe1	Touch probe 1	Inactive: Touch probe not triggered Active: Touch probe triggerable	The touch probe logic is only related to the touch probe function (60B8h).
39	TouchProbe2	Touch probe 2	Inactive: Touch probe not triggered Active: Touch probe triggerable	The touch probe logic is only related to the touch probe function (60B8h).

No.	Name	Function	Description	Remarks
Functions of DO Signals				
01	S-RDY	Servo ready	Active: Servo ready Inactive: Servo not ready	The servo drive is ready to run.
02	TGON	Motor rotation	Inactive: The absolute value of filtered motor speed is lower than the setpoint of H06-16. Active: The absolute value of filtered motor speed reaches the setpoint of H06-16.	-
09	BK	Brake output	Active: Brake signal outputted Inactive: Brake signal not outputted	-
10	WARN	Warning	Active: Warning occurred on the servo drive Inactive: No warning occurred on the servo drive or the warning has been reset	-
11	ALM	Fault	Active: Fault occurred on the servo drive Inactive: No fault occurred on the servo drive or the fault has been reset	-
25	CMP	Position comparison	Active: Servo drive passing the target position comparison point Inactive: Servo drive not passing the target position comparison point	-
32	EDM	Safe state	Active: STO triggered Inactive: STO not triggered	The EDM outputs active signals only when the 24 V input voltages for STO1 and STO2 are both disconnected.
H04.23	EtherCAT forced DO in non-operational status		See *"Table 5–3 " on page 65EtherCAT forced DO in non-operational status* for details.	

Table 5–3 EtherCAT forced DO in non-operational status

Setpoint	Description
0	Output retained upon offline for DO1 to DO3
1	Output canceled upon offline for DO1, output retained upon offline for DO2 and DO3
2	Output canceled upon offline for DO2, output retained upon offline for DO1 and DO3
3	Output canceled upon offline for DO1 and DO2, output retained upon offline for DO3
4	Output canceled upon offline for DO3, output retained upon offline for DO1 and DO2
5	Output canceled upon offline for DO1 and DO3, output retained upon offline for DO2
6	Output canceled upon offline for DO2 and DO3, output retained upon offline for DO1
7	Output canceled upon offline for DO1 to DO3

- Forced DI function
  After this function is enabled, all DI signal levels are controlled by the forced DI setting (H0d.18), independent of external DI signal status.
  - Operating procedure:

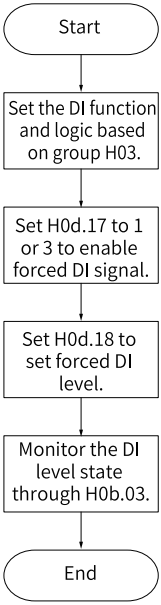

Figure 5-6 Procedure for setting forced DI function

Related parameters:

Para. No.		Name	Value Range	Function	Setting Condition	Effective Time	Default
Panel Side	Software Tool Side						
H0d.17	200d.12h	Forced DI/DO selection	0: No operation 1: Forced DI enabled, forced DO disabled 2: Forced DO enabled, forced DI disabled 3: Forced DI and DO enabled 4: EtherCAT forced DO enabled	Forced DI/DO selection	During operation	Immediately	0

H0d.18 is used to set the forced DI level. The operating panel displays the value in hexadecimal. After the hexadecimal value is converted to a binary value, the value "1" indicates high level and "0" indicates low level.

The DI logic is defined by parameters in group H03. H0b.03 is used to monitor the DI level status. The operating panel displays the level, and the value of H0b.03 read in the software tool is hexadecimal.

- Example:
  To activate the function assigned to DI1 and deactivate functions assigned to DI2 to DI5 (all the five DIs are active at low level), set as follows:

  As the value "1" indicates high level and the value "0" indicates low level, the corresponding binary value and hexadecimal value are "11110" and "1E" respectively. Therefore, set H0d.18 to "1E" through the operating panel.

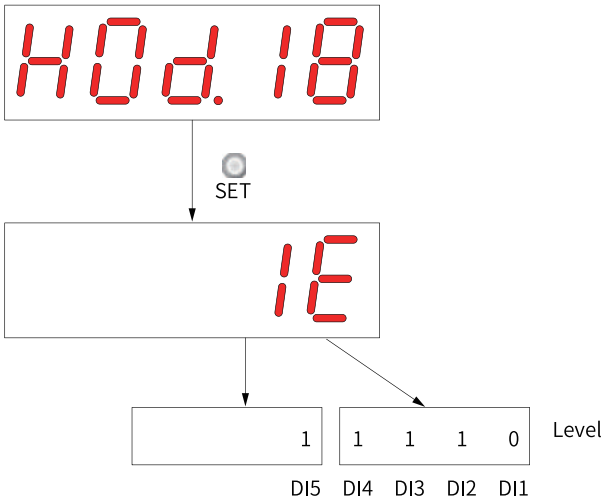

Figure 5-7 Setpoints of H0d.18

Monitor the DI level status through H0b.03:

If the DI function is normal, the display value of H0b.03 is always the same as that of H0d.18.

In this case, DI1 is displayed as low level and DI2 to DI5 are displayed as high level on the operating panel, and the value of H0b.03 read by the software is 1E (hexadecimal).

The operating panel displays as follows:

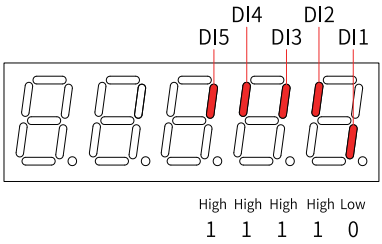

Figure 5-8 DI level status corresponding to H0b.03

- Exit
  The forced DI signal function is not retentive upon power-off. Normal DIs apply after restart, or you can set H0d.17 to 0 to return to the normal DI mode.

- Forced DO function
  After this function is enabled, all DO signal levels are controlled by H0d.19, regardless of the internal DO status of the servo drive.

Caution

If the motor is used in vertical motion, when the brake output signal is set to Enabled, the brake will open and the load may fall. Take protective measures on the machine to prevent the risk of falling.

- Operating procedure

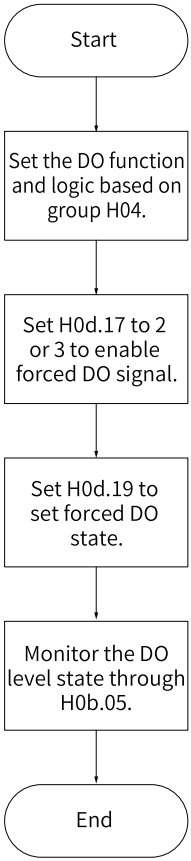

Figure 5-9 Procedure for setting forced DO function

H0d.19 is used to set whether the DO function is active. The operating panel displays the value in hexadecimal. After the hexadecimal value is converted to a binary value, the value 1 indicates that the DO function is active and 0 indicates that the DO function is inactive.

The DO logic is defined by parameters in group H04. H0b.05 is used to monitor the DO level status. The operating panel displays the level, and the value of H0b.05 read in the software tool is hexadecimal.

- Example:
  To deactivate the function assigned to DO1 and activate the functions assigned to DO2 and DO3, set as follows:

As the value "1" indicates that the DO function is active and "0" indicates that the DO function is inactive, the binary value is "110", which corresponds to the hexadecimal value "6". Therefore, set H0d.19 to 6 through the operating panel.

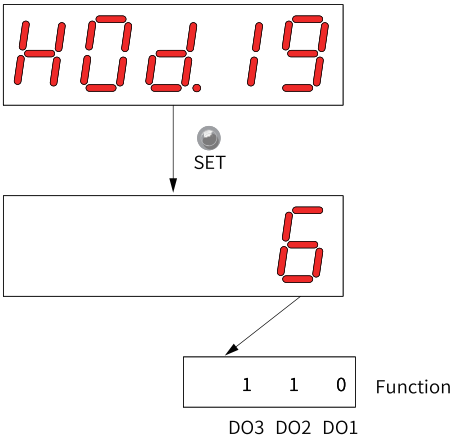

Figure 5-10 Setpoints of H0d.19

Monitor the DO level status through H0b.05:

If the logic of all the three DO terminals are "active low", DO1 is high level and DO2 to DO3 are low level. In this case, the corresponding binary number is "001" and the value of H0b.05 read by the software tool is 1 (decimal). The operating panel displays as follows:

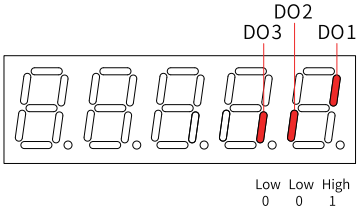

Figure 5-11 Display of H0b.05 when all DOs are "active low"

If the logic of all the three DO terminals are "active high", DO1 is low level and DO2 to DO3 are high level. In this case, the corresponding binary number is "110" and the value of H0b.05 read by the software tool is 6 (decimal). The operating panel displays as follows:

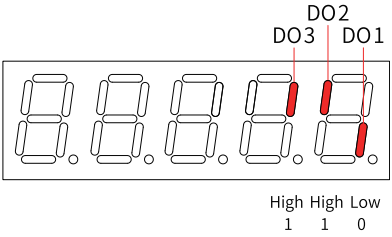

Figure 5-12 Display of H0b.05 when all DOs are "active high"

- Exit
  The forced DO signal function is not retentive upon power-off. Normal DOs apply after restart, or you can set H0d.17 to 0 to return to the normal DO mode.

- Bus control forced DO function
  After this function is enabled, all DO signal levels are controlled by 60FE.01h (Physical output) and are unrelated to the internal DO signal status.

  If the motor is used for vertical motion, when the brake output signal is set to Active (DO assigned with function 9: BK), the brake will open and the load may fall. Take protective measures on the machine to prevent the risk of falling.

  - Operating procedure

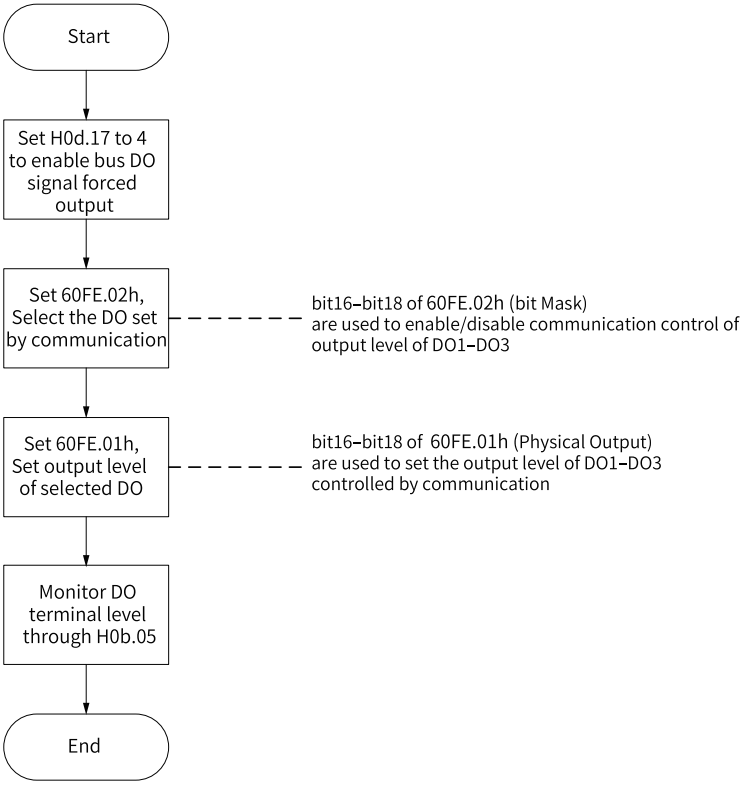

Figure 5-13 Procedure for setting bus control forced DO function

When 200D.12h is set to 4, 60FE (Digital output) can be used to forcibly set the DO terminal level through the bus, regardless of the internal DO status of the drive.

Bit	Related DO	Output Mask: 60FE.02h	Physical Output: 60FE.01h
16	DO1	1: DO1 forced output enabled	DO1 forced output (0: OFF, 1: ON)
17	DO2	1: DO2 forced output enabled	DO2 forced output (0: OFF, 1: ON)
18	DO3	1: DO3 forced output enabled	DO3 forced output (0: OFF, 1: ON)

When 200D.12h is set to 4 and any bit among bit 16 to bit 18 of 60FE.02h is set to 1, the corresponding forced DO is OFF.

H0b.05 is used to monitor the DO level status. The operating panel displays the level, and the value of H0b.05 read in the software tool is hexadecimal.

Example: To make the output levels of DO1 to DO3 be forcibly set through the bus, in which DO1 outputs low level and DO2 and DO3 output high level, set as follows:

Set 200d.12h to 4, 60FE.02h to 0x00070000, and 60FE.01h to 0x00060000. Monitor the DO level status through H0b.05. The operating panel displays as follows:

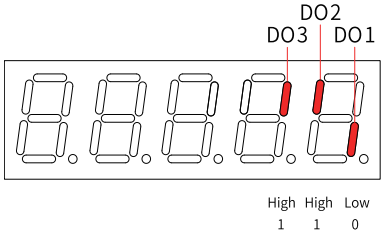

Figure 5-14 Display of H0b.05 when DO signals are controlled through the bus

- Exit
  The forced DO signal function in the bus control mode is not retentive upon power-off. Normal DOs apply after restart, or you can set H0d.17 (200d.12h) to 0 to return to the normal DO mode.

User password

After the user password (H02.30) is enabled, only authorized operators can set parameters.

Set bit 5 of H0A.71 to 1. After setting the user password, you can't view and change the parameters after H02 group through the panel and Inovance servo commissioning platform.

- Setting the user password
  The following figure shows how to set the user password to "00001".

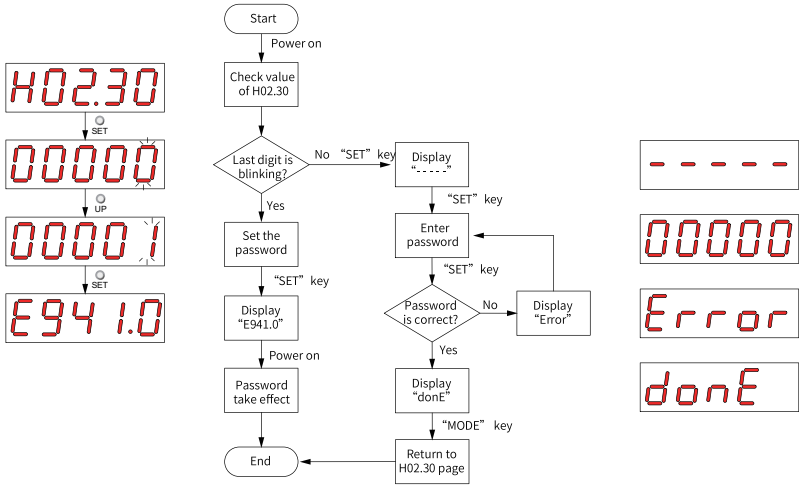

Figure 5-15 Procedure for setting the user password

To change the user password, enter the current password first to authorize the access to parameter setting. Next, enter H02.30 again to set a new password based on the procedure shown in the preceding figure.

Note

If the last bit does not blink, the access to parameters is password protected. If the last bit blinks, password is not needed or the password entered is correct.

- Canceling the user password
  Enter the set user password, and set H02.30 to "00000" to cancel the user password.

6 STO

6.1 Overview

Figure 6-1 Schematics of the STO function

Safe Torque Off (STO) is a safety function that complies with IEC 61800-5-2:2016. It is built into Inovance SV660F series servo drives.

The STO function inhibits the control signal of the power semiconductors on the drive output end, preventing the drive from generating torque at the motor shaft end.

The STO function prevents movement of the motor by two redundant external hardware signals (STO1 and STO2) that block the PWM signals from being outputted to the power layer of the servo drive. STO1 and STO2 input signals must be both active to allow the servo drive to operate normally.

See the following table for the STO function.

STO1 input	STO2 input	PWM signal
H	H	Normal
L	H	Inhibited
H	L	Inhibited
L	L	Inhibited

STO (safe torque)	
Description	Cuts off the power of the motor.
Description	The safe torque off (STO) function brings the machine safely into a no-torque state and prevents it from unexpected start. If the motor is running when STO function is activated, it coasts to stop.
Safe state	Disables the PWM gating signal of the drive.
Operating mode	High demand mode or continuous mode

6.2 Function Use and Monitoring

Function Use

The keypad displays the STO function state and error information.

See the following table to identify the cause of a fault and the action to be taken. Contact Inovance technical support if the fault persists after corrective actions listed in the following table are taken.

Fault codes related to the STO function are listed in the following table:

Fault Code	State	Description	Cause	Corrective Action
E150.1	Status of STO1 and STO2 inconsistent	Only one of STO1 and STO2 is in "Low" state, status of STO1 and STO2 are inconsistent.	The input states of STO1 and STO2 are inconsistent.	1. Ensure the requests for disconnecting the voltage of STO1 and STO2 are triggered simultaneously. 2. The input circuit is abnormal and a certain STO input signal is still in the"H" state after the 24 V signal is disconnected. Contact Inovance for technical support.
E150.2	STO activated	OV/UV of the 5V power supply is detected.	OV/UV of the 5V power supply.	Restore the 5 V power supply to normal state. Contact Inovance for technical support.
E150.3	STO activated	The input circuit of STO works improperly.	The input circuit of STO works improperly.	Fix the input circuit fault. Contact Inovance for technical support.
E150.4	STO activated	The buffer circuit of STO works improperly.	The buffer circuit of STO works improperly.	Fix the buffer circuit fault. Contact Inovance for technical support.

Note

- For a motor with brake, if either STO1 or STO2 closes, the drive will be disabled within 30 ms (STO response time).
- For a motor without brake, if either STO1 or STO2 closes, the drive will be disabled within 5 ms (STO response time).
- In the preceding two cases, if the 24V disconnection time difference between STO1 and STO2 is higher than 10 ms, the drive reports E150.1.

Application Example of Safety Function

Example 1:

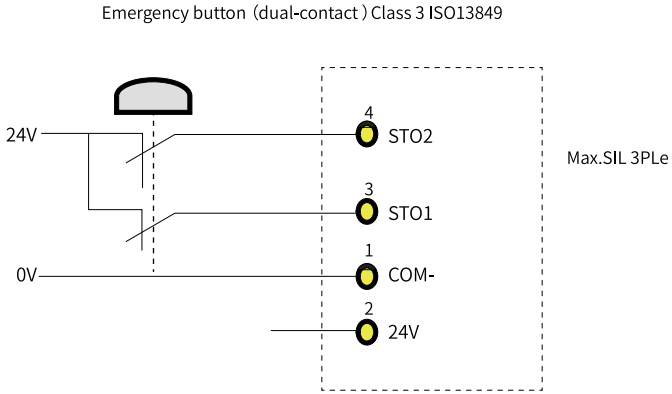

6.3 Fault Reset

The exceptional operation refers to the durations of power-on and initialization, and how to return from the STO state.

- The PWM buffer is disabled as the enable terminal is pulled up during power-on, so the PWM signal is inhibited.
- The PWM buffer is disabled as the enable terminal is pulled up during initialization of the MCU, so the PWM signal is inhibited. Such condition is cleared and servo drive works normally after initialization is done.
- When all of the following conditions are met, the servo system that enters the safe state through the STO function can be back to normal with the safe state cleared after auto-reset of the drive.
  - The input state of the STO request must be "high".
  - The servo ON or servo RUN command must be inactive.
  - No dangerous faults exist.

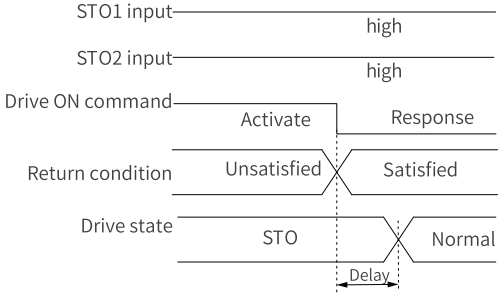

Figure 6-2 Return condition of servo ON/RUN command

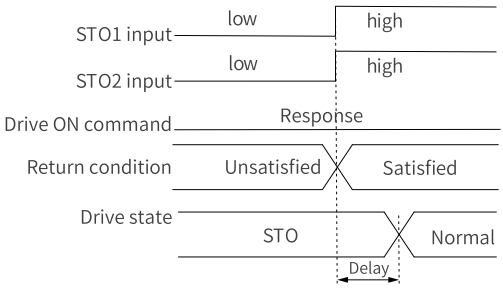

Figure 6-3 Return condition of external STO request state

- When STO_IN (STO1 or STO2 input) is restored to 24 V, the EDM and servo ready signals are immediately reset to 0. After 400 milliseconds, the servo operation signal is activated (when STO_IN keeps at 24 V). Servo operation is PWM drive signal output.

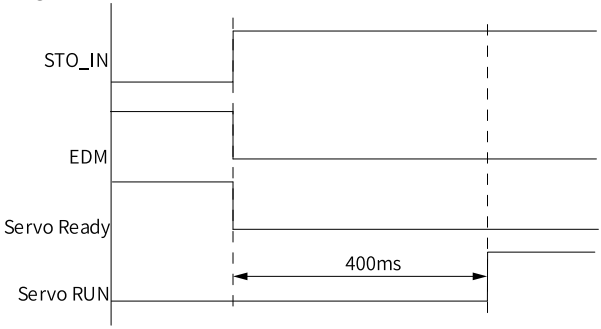

Figure 6-4 Servo drive reset timing diagram

6.4 Safety Function Response Time

The STO function prevents movement of the motor by two redundant external hardware signals (STO1 and STO2) that block the PWM signals from being outputted to the power layer of the servo drive. STO1 and STO2 input signals must be both active to allow the servo drive to operate normally.

If either one or both signals are set to "Low" level, the PWM signals will be blocked within 30 ms.

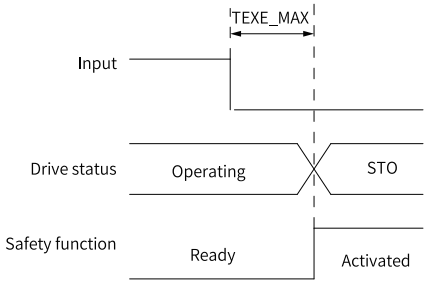
tTEXE_MAX
Input
Drive status
Operating
STO
Safety function
Ready
Activated

7 Commissioning and Operation

7.1 Commissioning Flowchart

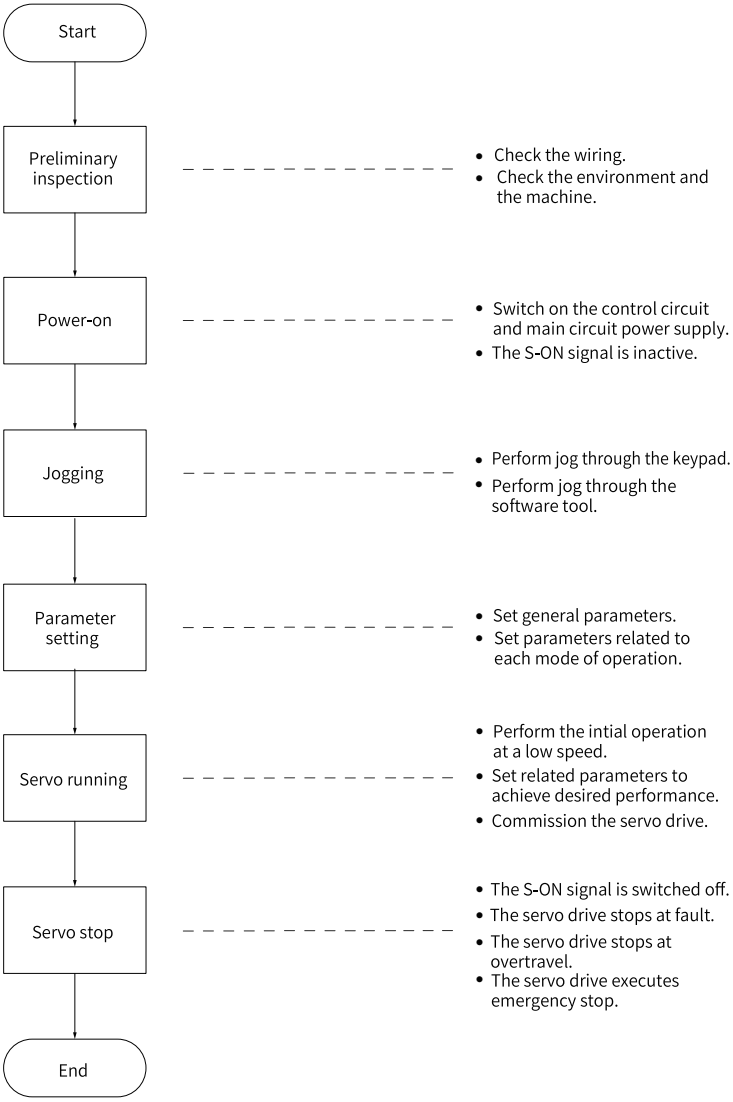

Figure 7-1 Commissioning flowchart of the drive

7.2 Commissioning Steps

See SV660N Series Servo Commissioning Guide.

7.3 Acceptance

Basic requirements

- Technical staff must be trained to understand the requirements and principles of designing and operating safety-related systems.
- Person performing the maintenance must be trained to understand the requirements and principles of designing and operating safety-related systems.
- Operators must be trained to understand the requirements and principles of designing and operating safety-related systems.
- The safety-related circuit on the control board that fails to operate must be replaced with a new one as it is not repairable.

Commissioning Checklist

- Start-up test and validation
  IEC 61508, EN/IEC 62061 and EN ISO 13849 require the final assembler of the equipment to verify the operation of the safety function through acceptance testing. This acceptance test is described in the drive manual. The testing of optional safety features is described in the corresponding manuals.

  The acceptance test must be performed:

  - at initial start-up of the safety function
  - after any changes related to the safety function (wiring, components, settings and so on).
  - after any maintenance work related to the safety function.

  The acceptance test of the safety function must be carried out by an authorized person with expertise and knowledge of the safety function. The test must be documented and signed by the test staff.

  Signed acceptance test reports must be stored in the logbook of the machine. The report shall include documentation of start-up activities and test results, references to failure reports and resolution of failures. Any new acceptance tests performed due to changes or maintenance need to be logged into the logbook.

- Checklist

Step	Action	Result
1	Ensure that the drive runs and stops freely during commissioning.	
2	Stop the drive (if running), switch the input power supply off and isolate the drive from the power line by a disconnector.	

Step	Action	Result
3	Check the STO circuit connections based on the circuit diagram.	
4	Check that the shield of the STO input cable is grounded to the drive frame.	
5	Close the disconnector and switch the power supply on.	
5.1	Test the STO signal #1 when the motor stops: Set STO1 and STO2 to "H". Send a stop command to the drive (if running) and wait until the motor shaft is at standstill. Awake the STO function by de-energizing (low state or open-circuit) the STO input signal #1 and send a start command to the drive. Ensure that the motor stays at a standstill and the keypad of the drive displays "E150.1".	
5.2	Set STO1 to "H" and disable the ON/RUN command of the drive. Then, reset the drive automatically and enable ON/RUN command of the drive. Finally, check whether the motor runs normally.	
5.3	Test the STO signal #2 when the motor stops: Set STO1 and STO2 to "H". Send a stop command to the drive (if running) and wait until the motor shaft is at standstill. Awake the STO function by de-energizing (low state or open-circuit) the STO input signal 2 and send a start command to the drive. Ensure that the motor stays at a standstill and the keypad of the drive displays "E150.1".	
5.4	Set STO2 to "H" and disable the ON/RUN command of the drive. Then, reset the drive automatically and enable ON/RUN command of the drive. Finally, check whether the motor runs normally.	
6.1	Test the STO channel 1 when the motor is running: Set STO1 and STO2 to "H". Start the drive and ensure the motor is running. Awake the STO function by de-energizing (low state or open-circuit) the STO input signal 1. Ensure that the motor stops and the drive trips. Reset the fault and try to start the drive. Ensure that the motor stays at a standstill and the keypad of the drive displays "E150.1".	
6.2	Set STO1 to "H" and disable the ON/RUN command of the drive. Then, reset the drive automatically and enable ON/RUN command of the drive. Finally, check whether the motor runs normally.	

Step	Action	Result
6.3	Test the STO channel 2 when the motor is running: Set STO1 and STO2 to "H". Start the drive and ensure the motor is running. Awake the STO function by de-energizing (low state or open-circuit) the STO input signal 2. Ensure that the motor stops and the drive trips. Reset the fault and try to start the drive. Ensure that the motor stays at a standstill and the keypad of the drive displays "E150.1".	
6.4	Set STO2 to "H" and disable the ON/RUN command of the drive. Then, reset the drive automatically and enable ON/RUN command of the drive. Finally, check whether the motor runs normally.	
7	Document and sign the acceptance test report which verifies that the safety function is safe and acceptable for operation.	

Special requirements

You must conduct STO diagnosis every three month by powering off and powering on the drive once, or running the STO function once.

Note

There are two ways to perform STO diagnosis:

- Power off and restart;
- Trigger and then cancel STO.

You can use either of them.

8 Maintenance

8.1 Routine Maintenance

Standard operating conditions:

Average annual ambient temperature: 30°C Average load rate: ＜ 80% Daily operating time: ＜ 20 h

8.1.1 Routine Checklist

Check the following items during routine inspection.

Table 8–1 Routine checklist

No.	Routine Checklist	Checked
1	The ambient temperature and humidity are normal. There is no dust or unwanted objects in the servo drive.	☐
2	There is no abnormal vibration or noise.	☐
3	The voltage of the power supply is normal.	☐
4	There is no strange smell.	☐
5	There are no fibers adhered to the air inlet.	☐
6	There is no intrusion of unwanted object on the load end.	☐

8.1.2 Routine Cleaning List

Check the following items during routine cleaning.

Table 8–2 Routine cleaning list

No.	Routine Cleaning List	Checked
1	Clean the dust on the equipment surface, especially the metallic dust.	☐
2	Keep the front end of the servo drive and the connectors clean.	☐

Note

- Cut off the power supply before cleaning. Clean the equipment with an air gun or a piece of dry cloth.
- Do not use the gasoline, diluent, alcohol, acidic or alkaline detergent during cleaning to prevent enclosure discoloration or damage.

8.2 Periodic maintenance

8.2.1 Periodic Checklist

Table 8–3 Periodic checklist

No.	Item	Checked
1	The screws used to fix the couplings between devices are in place.	☐
2	There is no sign of overheating.	☐
3	Terminal blocks are in good condition without any sign of damage.	☐
4	The clamping units of terminal blocks are in place.	☐

8.2.2 Periodic Maintenance List

The electrical and electronic parts inside the servo drive may be mechanically worn out and degraded. To keep the servo drive and servo motor in good condition, perform parts replacement based on the replacement cycles listed in the following table. Contact Inovance or Inovance agent before replacement to double check whether the part needs to be replaced.

Object	Type	Standard Replacement Interval	Remarks
Drive	Bus filter capacitor	About five years	The standard replacement interval is for reference only. If any device/ component works improperly before the replacement interval expires, replace it immediately.
	Fan	2 to 3 years (10,000 h to 30,000 h)	
	Aluminum electrolytic capacitor on the PCB	About five years	
	Pre-charge relay	100000 operations (depending on the operating conditions)	
	Pre-charge resistor	20000 operations (depending on the operating conditions)	
Motor	Bearing	3 to 5 years (20,000 h to 30,000 h)	
	Oil seal	5000 h	
	Encoder	3 to 5 years (20,000 h to 30,000 h)	
	Absolute encoder battery	Depends on the operating condition. See the operation instructions for the encoder battery for details.	

9 Certification and Standard Compliance

Table 9–1 Compliance list

Certification	Directive Name		Standard
CE certification	EMC directive	2014/30/EU	EN IEC 61800-3
	LVD directive	2014/35/EU	EN 61800-5-1 EN 60034
	RoHS directive	2011/65/EU	EN 50581
UL/cUL certification	-		UL61800-5-1 C22.2 No.274-17 UL 1004-6 CSA C22.2 No. 100-14

Note

The drive complies with the latest version of directives and standards for CE and UL/cUL certifications.

9.1 CE Certification

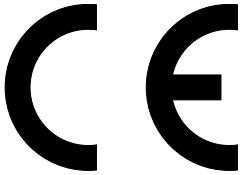

Figure 9-1 CE mark

- The CE mark indicates compliance with the Low Voltage Directive (LVD), Electromagnetic Compatibility (EMC), and Restriction of Hazardous Substances (RoHS) directives.
- The CE mark is required for engaging in commercial business (production, importation, and distribution) in Europe.
- The drive complies with LVD, EMC, and RoHS directives and carries the CE mark.
- Machines and devices integrated with this drive must also comply with CE requirements for distribution in Europe.
- The integrator who integrates this drive into other products and attaches CE mark to the final assembly has the responsibility of ensuring compliance with CE certification.

9.1.1 Requirement for Compliance with EMC Directive

The SV660P series servo drive, which is applicable to the first environment and second environment, complies with EMC Directive 2014/30/EU and standard EN IEC 61800-3.

As required by EMC Directive 2014/30/EU and standard EN IEC 61800-3, install an EMC filter on the input side of the drive and use shielded cables on the output side. Ensure the filter is grounded properly and the shield of the output cable is grounded 360 degrees.



- When applied in the first environment, the drive may generate radio interference. In addition to the CE compliance requirements described in this chapter, take additional measures, if necessary, to prevent the radio interference generated by the drive.

Introduction to EMC standards

Electromagnetic compatibility (EMC) describes the ability of electrical and electronic devices to work properly in the electromagnetic environment without introducing electromagnetic interferences that disturb the operation of other local devices or systems. In other words, EMC includes two aspects: 1) The electromagnetic interference generated by a device during normal operation cannot exceed a certain limit. 2) The device must have sufficient immunity to the electromagnetic interference in the environment.

EN IEC 61800-3 defines the following two types of environments.

- First environment: Environment that includes domestic premises, and establishments directly connected without intermediate transformers to a low-voltage power supply network which supplies buildings used for domestic purposes
- Second environment: Environment that includes all establishments other than those directly connected to a low-voltage power supply network which supplies buildings used for domestic purposes

Drives are divided into the following four categories based on the intended application environment.

- Category C1 drive: Power drive system (PDS) with rated voltage less than 1000 V, intended for use in the first environment

- Category C2 drive: PDS with rated voltage less than 1000 V, which is neither a plug-in device nor a movable device and, when used in the first environment, is intended to be installed and commissioned only by professionals
- Category C3 drive: PDS with rated voltage less than 1000 V, intended for use in the second environment and not intended for use in the first environment
- Category C4 drive: PDS with rated voltage equal to or above 1000 V, or rated current equal to or above 400 A, or intended for use in complex systems in the second environment

9.1.2 Requirements for Compliance with LVD

The drive has been tested in accordance with EN61800-5-1 to determine compliance with LVD. Observe the following requirements to enable machines and devices integrated with this drive to comply with LVD.

Installation location

Install the drive in a place with overvoltage category III and pollution degree 1 or 2 as specified by IEC 60664-1.

Installation environment

For requirements of the installation environment, see *"3.2 Installation Environment" on page 40*.

Protective requirements of installation

The drive must be installed in a fireproof cabinet with doors that provide effective electrical and mechanical protection. The installation must conform to local and regional laws and regulations and relevant IEC standards.

Drives (IP20) intended to be installed inside the cabinet must be installed in a structure that prevents intrusion of unwanted objects from the top and the front.

Main circuit wiring requirements

For wiring requirements of main circuit terminals, see section Main Circuit Wiring Requirements.

Requirements of protective devices

To comply with EN 61800-5-1, install a fuse/circuit breaker on the input side of the drive to prevent accidents caused by short circuit in the internal circuit.

For recommended fuse/circuit breaker models, see "Fuses" and "Circuit Breakers" in Chapter "Optional Parts" of SV660N Series Servo Drive Selection Guide.

9.2 UL and cUL Certification



Figure 9-2 UL/cUL mark

The UL/cUL mark is commonly applied to products sold in the United States and Canada. It indicates that UL has performed product tests and evaluation, and determined that their stringent standards have been met. For a product to receive UL/cUL certification, the main components inside the product must also be UL certified.

The drive has been tested in accordance with UL 61800-5-1 and CSA C22.2 No. 274-17 to determine compliance with UL/cUL standards. Observe the following requirements to enable machines and devices integrated with this drive to comply with UL/cUL standards.

Installation location

Install the drive in a place with overvoltage category III and pollution degree 1 or 2 as specified by UL61800-5-1.

Ambient temperature

Keep the ambient temperature within the following range based on the IP rating:

Ambient temperature for open-type drives: 0°C to 50°C

Installation requirements

Installation requirements for open-type drives:

SV660N series servo drives are open-type drives that must be installed in a fireproof cabinet with the housing that provides effective electrical and mechanical protection. The installation must conform to local laws and regulations and related NEC requirements.

Main circuit wiring requirements



On-site installation of output terminals (such as P⊕, C, and NΘ) is not allowed.

- Terminals P⊕, C, and NΘ are used to connect optional parts. Do not connect these terminals to an AC power supply.
- To protect the main circuit, separate and cover the surface that may come into contact with the main circuit.
- The control circuit is the internal safety extra-low voltage (SELV) circuit that must be strictly insulated and isolated from other circuits. Make sure that the control circuit is connected to the external SELV circuit.
- Prevent foreign objects from entering the wiring area of the terminal block.
- Do not solder the twisted conductors.
- The tightening torque may vary with terminals. Tighten terminal screws with the specified tightening torque. You can use a torque screwdriver, torque ratchet, or torque wrench to tighten terminal screws.
- When using an electric screwdriver to tighten terminal screws, set the electric screwdriver to low speed to prevent damage to the terminal screws.
- Tighten the terminal screws with an angle not greater than 5°. Failure to comply may damage the terminal screws.

Control circuit wiring requirements

Observe the requirements in UL508 during wiring.

Cable requirements

Cable dimensions must be compliant with requirements in NEC (National Electric Code) and CEC (Canadian Electrical Code) Part I and local regulations.

- Use cables with copper conductors.
- The cable recommended for the main circuit is a 600 V class 2 indoor heat-resistant PVC cable that can continuously tolerate a temperature up to 75°C. The following conditions are used as premises:
  - Ambient temperature: < 40°C
  - Normal operating ratings

If the recommended cable specifications for peripheral devices or optional parts exceed the applicable cable specification range, contact Inovance.

Cable selection

To comply with UL61800-5-1 and CSA C22.2 No. 274-17, power cables used for SV660 series servo drives must meet the following requirements:

- Compliant with NEC and Table 310-16 of NFPA70
- Comprised of copper conductors with a rated temperature not lower than 75°C (167°F)
- Cable size must be 14AWG or higher.
- With a rated voltage not lower than the rated voltage of the servo drive
- It is recommended to use cables compliant with UL758 Style 2517 and Style 2586 as motor main circuit cables.

Requirements of protective devices

To comply with UL 61800-5-1, install a fuse/circuit breaker on the input side of the drive to prevent accidents caused by short circuit in the internal circuit.

Install sufficient protective devices against short circuit in branch circuits according to applicable regulations and this guide. The drive is applicable to circuits with a rated breaking capacity lower than 5000 A and a maximum voltage of 480 VAC (class 400 V).

Note

All breaker protective devices must be UL-certified.

For the SV660 drive applied in North America, the recommended protective devices are as follows:

Fuse type: Semiconductor Fuse						
Servo drive model SV660F****I			Recommended Fuse UL-compliant FWH Series			
Size	Model	Rated Input Current (A)	Manufacturer	Model	Rated Voltage (V)	Rated Current (A)
Three-phase 380 V						
Size E	T017	12	COOPER BUSSMANN LLC	FWH-50B	500	50
	T021	16		FWH-70B	500	70
	T026	21		FWH-125B	500	125

Circuit Breaker Type: Inverse Time Circuit Breaker						
Servo Drive Model SV660F****I			Recommended Fuse UL-compliant 3VA6 Series			
Size	Model	Rated Input Current (A)	Manufacturer	Model	Rated Voltage (V)	Rated Current (A)
Single-phase 220 V						
Size A	S1R6	2.3	SIEMENS AG	3VA6140-6HL31	480	40
	S2R8	4.0		3VA6140-6HL31	480	40
Size B	S5R5	7.9		3VA6140-6HL31	480	40
Size C	S7R6	9.6		3VA6210-6HL31	480	100
Size D	S012	12.8		3VA6210-6HL31	480	100
Three-phase 220 V						
Size C	S7R6	5.1	SIEMENS AG	3VA6210-6HL31	480	100
Size D	S012	8.0		3VA6210-6HL31	480	100
Three-phase 380 V						
Size C	T3R5	2.4	SIEMENS AG	3VA6210-6HL31	480	100
	T5R4	3.6		3VA6210-6HL31	480	100
Size D	T8R4	5.6		3VA6210-6HL31	480	100
	T012	8.0		3VA6210-6HL31	480	100

10 Troubleshooting

See SV660N Series Servo Drive Troubleshooting Guide.

11 List of Parameters

See SV660N Series Servo Commissioning Guide.

Copyright © Shenzhen Inovance Technology Co., Ltd.

19011883A00

Shenzhen Inovance Technology Co., Ltd.

www.inovance.com

Add.: Inovance Headquarters Tower, High-tech Industrial Park, Guanlan Street, Longhua New District, Shenzhen
Tel: (0755) 2979 9595 Fax: (0755) 2961 9897
Customer service: 4000-300124

Suzhou Inovance Technology Co., Ltd.

www.inovance.com

Add.: No. 16 Youxiang Road, Yuexi Town, Wuzhong District, Suzhou 215104, P.R. China
Tel: (0512) 6637 6666 Fax: (0512) 6285 6720
Customer service: 4000-300124